MITSUBISHI

PROGRAMMABLE CONTROLLER

MELSEC-A

User's Manual

type A2C I/O unit

MITSUBISHI ELECTRIC

REVISIONS

※The manual number is given on the bottom left of the back cover.

Print Date	*Manual Number	Revision
May, 1990	IB (NA) 66236-A	First edition
May, 1993	IB (NA) 66236-B	Addition Section 3.2.2, 3.2.3, 3.3.4, 3.7, 4.2.5 Correction CONTENTS, Section 2.1, 2.2, 3.2.4, 3.2.5, 3.3.1, 3.3.2, 3.3.5, 3.4.1, 3.4.2, 3.4.3, 3.6, 4.2.2, 4.2.3, 5.1.1, APP.1
Jul., 1993	IB (NA) 66236-C	Addition of models AJ35TB1-16D, AJ35TB2-16D, AJ35TC1-32D, AJ35TB1-16T, AJ35TB2-16T, AJ35TC1-32T, AJ35TC1-32DT Correction CONTENTS, Section 1, 2.1, 2.2, 4.2, 4.2.1, 5.1, 5.1.1 to 5.1.4 Addition 3.8, 3.8.1 to 3.8.7, 4.1.3, APP.1-(5) to (7)

INTRODUCTION

Thank you for choosing the Mitsubishi MELSEC-A Series of General Purpose Programmable Controllers. Please read this manual carefully so that the equipment is used to its optimum. A copy of this manual should be forwarded to the end User.

CONTENTS

1. INTRODUCTION 1-1

2. NOTES ON SELECTING THE I/O UNITS ..... 2-1~2-8

2.1 Modules that can Control the MINI Remote I/O Unit 2-1
2.2 Notes on Selecting the I/O Units 2-2

3. SPECIFICATIONS ..... 3-1~3-27

3.1 Specifications Common to the A2CI/O Units 3-1
3.2 Input Units 3-2
3.2.1 Type AX11C 100V AC input unit (32 points, 6mA) 3-2
3.2.2 Type AX21C 200V AC input unit (32 points, 5mA) 3-3
3.2.3 Type AX31C DC/AC input unit (32 points, 4mA/8.5mA) 3-4
3.2.4 Type AX41C 12/24V DC input unit (sink loading, 32 points, 3mA/7mA) 3-5
3.2.5 Type AX81C 12/24V DC input unit (sink/source loading, 32 points, 3mA/7mA) 3-6
3.3 Output Units 3-7
3.3.1 Type AY13C relay output unit (12V DC/110V AC, 32 points, 0.5A) 3-7
3.3.2 Type AY23C triac output unit (100-240V AC, 32 points, 0.3A) 3-8
3.3.3 Type AY51C transistor output unit (sink loading, 12/24V DC, 32 points, 0.3A) 3-9
3.3.4 Type AY61CE transistor output unit (source loading, 5 to 24V DC, 32 points, 1.0A) 3-10
3.3.5 Type AY81C transistor output unit (24V DC, 32 points, 0.5A) 3-11
3.4 I/O Units 3-12
3.4.1 Type AX10Y10C I/O unit (100V AC, input: 16 points, relay output: 16 points) 3-12
3.4.2 Type AX40Y10C I/O unit (12/24V DC, input: 16 points, relay output: 16 points) 3-13
3.4.3 Type AX10Y22C I/O unit (100V AC, input: 16 points, triac output: 16 points) 3-14
3.4.4 Type AX40Y50C I/O unit (12/24V DC, input: 16 points, transistor output: 16 points) 3-15
3.4.5 Type AX80Y10C I/O unit (12/24V DC, input: 16 points, relay output: 16 points) 3-16
3.4.6 Type AX80Y80C I/O unit (12/24V DC, input: 16 points, transistor output: 16 points) 3-17
3.5 Power Supply Unit (A66PC) 3-18
3.6 DIN Rail Adapter (A6DIN1C) 3-20
3.7 Common Terminal Block (A2CCOM-TB) 3-20

3.8 Remote Terminal Block I/O Units and Remote Connector I/O Units 3-21
3.8.1 AJ35TB1-16D input unit 3-21
3.8.2 AJ35TB2-16D input unit 3-22
3.8.3 AJ35TC1-32D input unit 3-23
3.8.4 AJ35TB1-16T transistor output unit 3-24
3.8.5 AJ35TB2-16T transistor output unit 3-25
3.8.6 AJ35TC1-32T transistor output unit 3-26
3.8.7 AJ35TC1-32DT input/output composite unit 3-27

4. PART IDENTIFICATION AND INSTALLATION ..... 4-1～4-8

4.1 Part Identification 4-1
4.1.1 I/O unit 4-1
4.1.2 Power supply unit 4-2
4.1.3 Remote terminal block I/O unit, remote connector I/O unit 4-3
4.2 Installation 4-5
4.2.1 Cautions on installation 4-5
4.2.2 Cautions on handling the DIN rail adapter 4-6
4.2.3 Fixing the unit to the DIN rail adapter 4-6
4.2.4 Mounting to the DIN rail 4-7
4.2.5 Common terminal block installation 4-8

5. TROUBLESHOOTING ..... 5-1～5-9

5.1 Troubleshooting 5-1
5.1.1 Problem: Input signals from the MINI remote I/O cannot be received or output signals sent to the MINI remote I/O cannot output 5-1
5.1.2 Problem: The PW LED of the MINI remote I/O is not ON 5-2
5.1.3 Problem: The RD LED of the MINI remote I/O is not ON 5-3
5.1.4 Problem: The operation indication on the MINI remote I/O does not match with operation of external devices 5-4
5.2 I/O Connection Troubleshooting 5-5
5.2.1 Input circuit problems and corrective actions 5-5
5.2.2 Output circuit problems and corrective actions 5-8

APPENDIX ..... APP-1～APP-7

APPENDIX 1 EXTERNAL DIMENSION DIAGRAM APP-1

1. INTRODUCTION

This manual describes handling instructions and specifications for the A2C I/O unit, remote terminal block I/O unit and remote connector I/O unit (to be referred to as MINI remote I/O in this manual) to be used with the A2CCPU unit (to be referred to as A2CCPU in this manual).

The MINI remote I/O is a simple I/O unit of baseless building block type which connects itself to the A2CCPU with twisted pair cables without a base unit. The maximum length of twisted pair cables allowed for this connection is 100 meters (3.28 ft).

The MINI remote I/O can be mounted easily to the DIN rail using an optional DIN rail adapter.

The MINI remote I/O can be used as the I/O module for the MELSECNET/MINI-S3 data link system (to be referred to as MINI-S3 link in this manual).

2. NOTES ON SELECTING THE I/O UNITS

2.1 Modules that can Control the MINI Remote I/O Unit

Modules that can control the MINI remote I/O are as shown below.

A2CCPU (C24)
AJ71PT32-S3 (AJ71PT32)
A1SJ71PT32-S3
A52GCPU (T21B)

POINT

Since an A2C I/O unit, remote terminal block I/O unit or remote connector unit is a remote I/O module for the twisted pair data link, cable connection can be made only with twisted pair cables.

2.2 Notes on Selecting the I/O Units

(1) Triac output units should be used instead of relay contact output units when:
- The outputs are being switched very frequently.
- A large inductive load is being switched.
- An inductive load with a low power factor is being switched.

The life of a relay switching any of the above conditions will be substantially reduced.

(2) The ON time and OFF time for any inductive load switched by an output unit must be more than one second.

(3) Beware of rush currents when a transistor output unit of which maximum load current is 0.3 A is used to switch a load incorporating a DC/DC converter (e.g. a timer or counter). Either connect a resistive or inductive load in series with the load or use an output unit of which maximum load current is large.

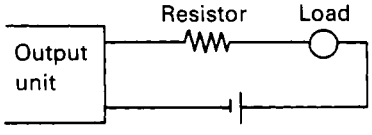

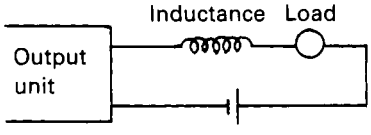

(4) Since overload protection is not provided, an external fast-blow fuse should be used at each point where fuse protection is required.
The following external fast-blow fuses are recommended.
AC : HP fuse
GP fuse
DC : MP fuse

POINT

The following versions are applicable to the I/O modules in this manual.

Model name	Applicable version
AY13C	Version H or later
AX10Y10C	Version H or later
AX40Y10C	Version J or later
AX80Y10C	Version C or later

Name plate

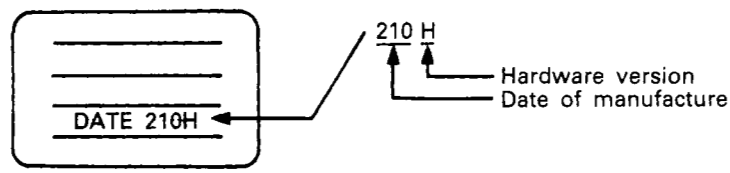

[Changed contents]

Item	Old version	New version
Rated switching current (current value per point)	24V DC (resistance load) 240V AC (cos ϕ =1) / 0.5 A/point, 100% simultaneous ON	24V DC (resistance load) 240V AC (cos ϕ =1) / 2A/point, 4A/common
Electrical life	200V AC 0.4A 240V AC 0.3A (cos ϕ =0.7)	200V AC 1.5A 240V AC 1A (cos ϕ =0.7)
	200V AC 0.14A 240V AC 0.12A (cos ϕ =0.35)	200V AC 1A 240V AC 0.5A (cos ϕ =0.35)
Max. switching frequency	3500 times/hour	3600 times/hour

(5) The relay life for relay output units is shown below. Relay output units should be selected with reference to these characteristics and to the frequency of operation.

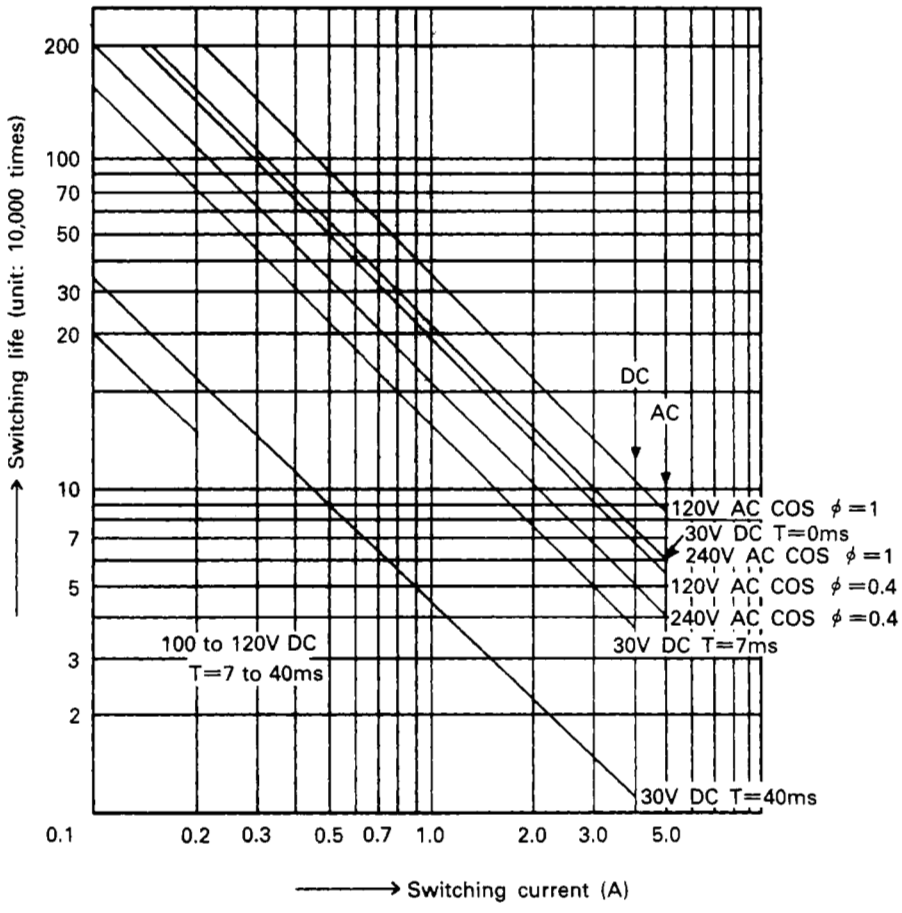

(6) The maximum number of input points which may be simultaneously ON in the AX ☐ C input unit varies with input voltage and ambient temperature as shown below. Select the number of simultaneous ON points referring to the figures shown below.

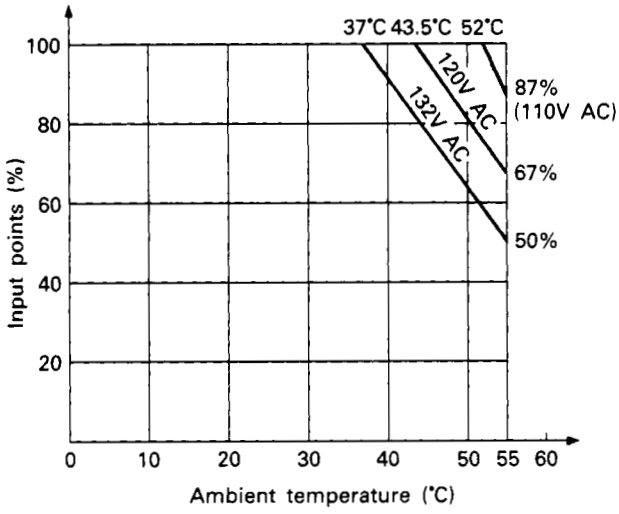

AX11C

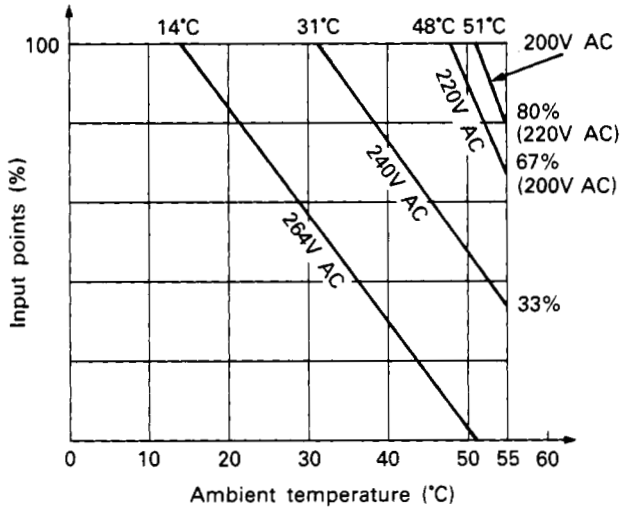

AX21C

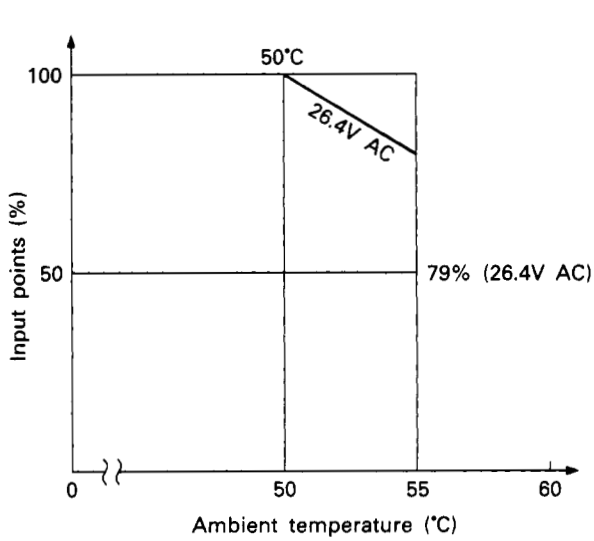

AX31C

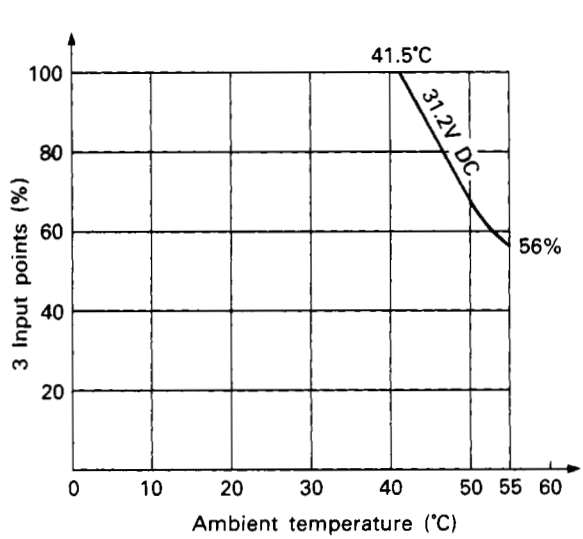

AX41C

(7) The maximum number of output points which may be simultaneously on in the AY C output unit varies with output current and ambient temperature as shown below. Select the number of simultaneous on points referring to the figures shown below.

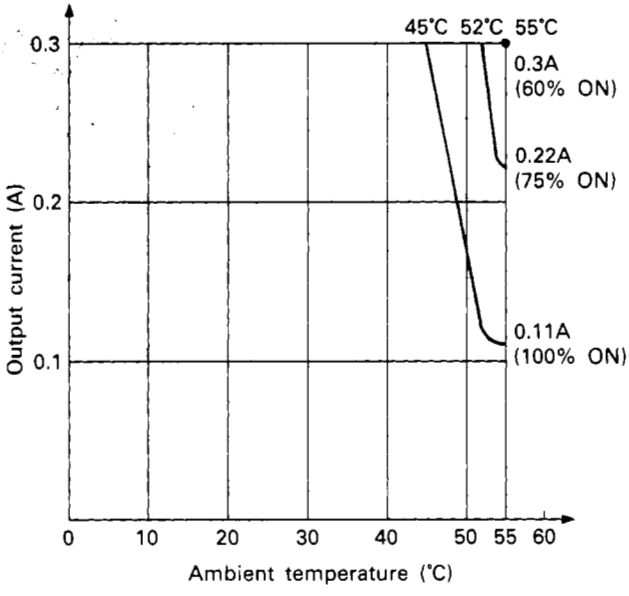

AY23C

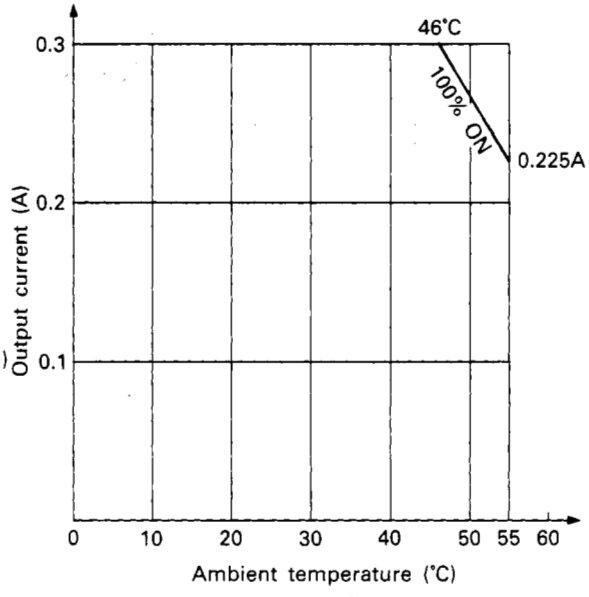

AY51C

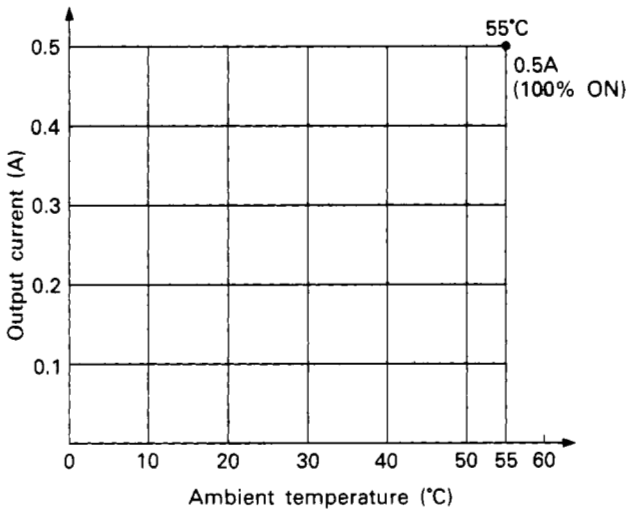

AY81C

(8) The maximum number of output points which may be simultaneously ON in the AX ☐ Y ☐ C input/output unit varies with input voltage, output current per one point and ambient temperature as shown below. Select the number of simultaneous ON points referring to the figures shown below.

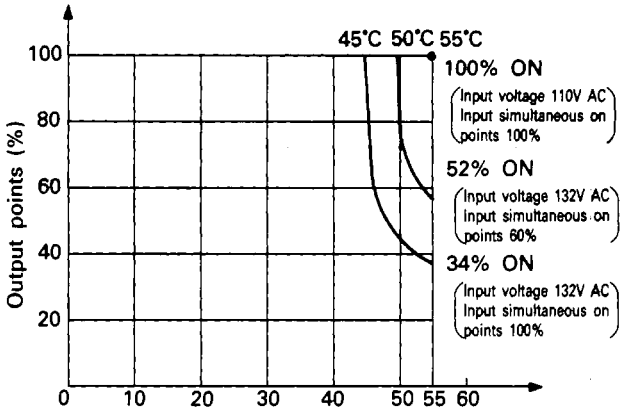

AX10Y10C

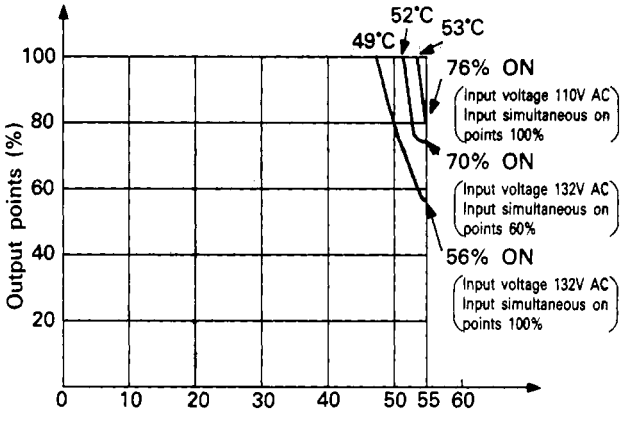

AX10Y22C

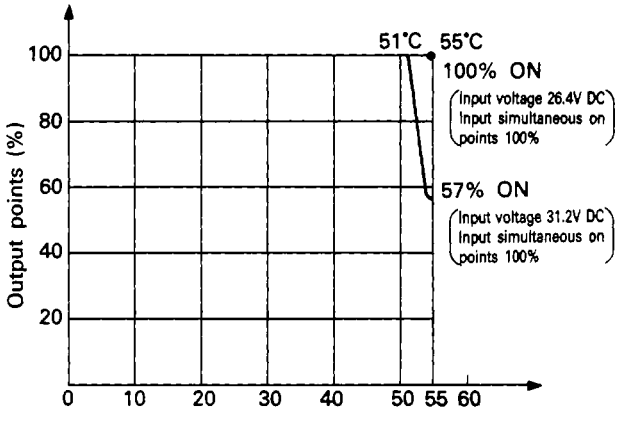

AX40Y10C, AX80Y10C

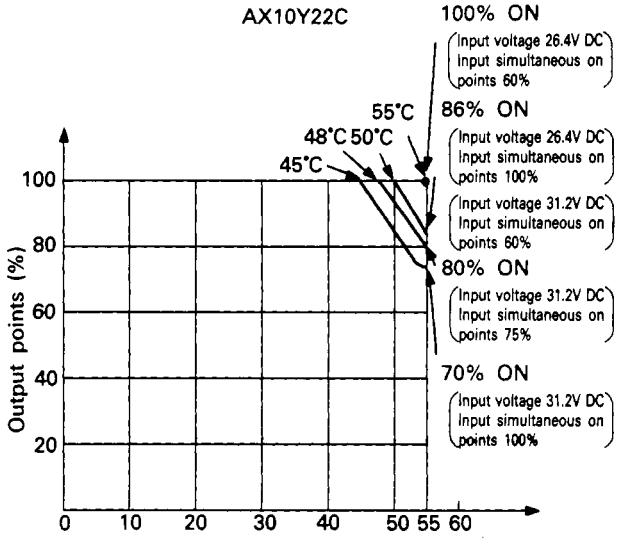

AX40Y50C

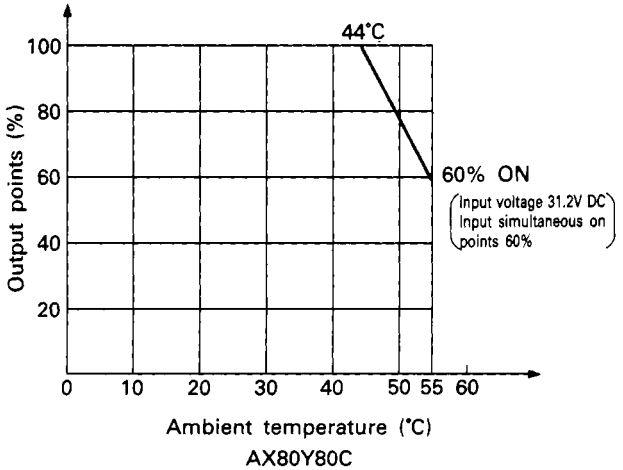

AX80Y80C

(9) The maximum number of input points which may be simultaneously ON in the AJ35TB1-16D and AJ35TC1-32D input units varies according to the input voltage and the ambient temperature. Determine the number of points simultaneously ON by reference to the diagrams below.

AJ35TB1-16D derating curve

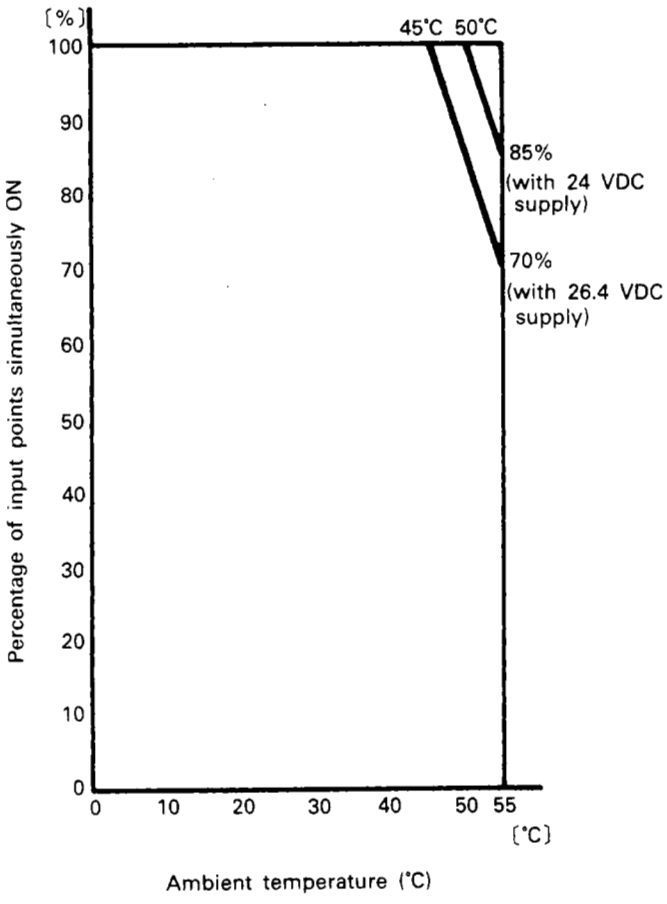

AJ35TC1-32D derating curve

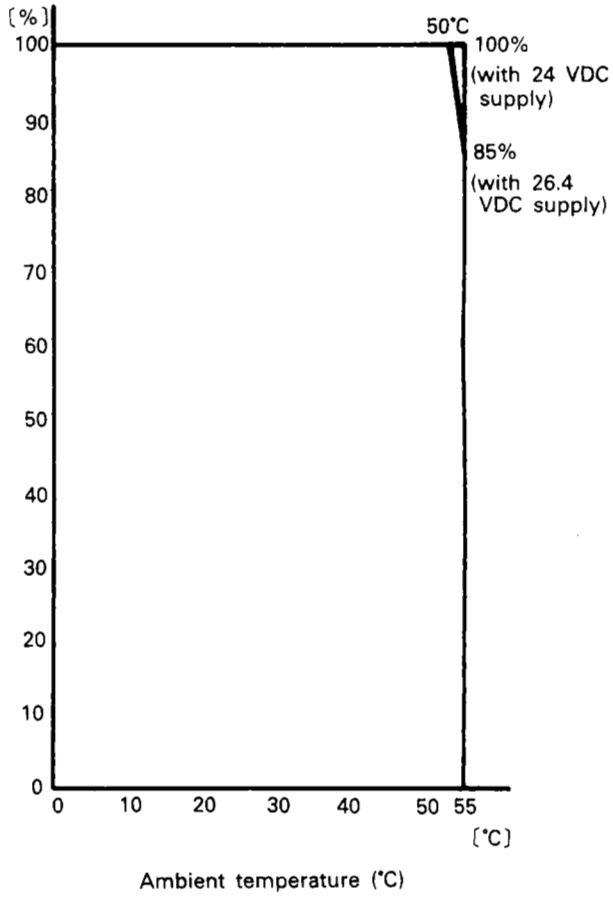

3. SPECIFICATIONS

3.1 Specifications Common to the A2CI/O Units

Table 3.1 shows the specifications common to the input units, output units and input/output units of the A2CI/O.

Table 3.1 A2CI/O Common Specifications

Item	Description
Indication	1 LED per point
External connection	50-point terminal block connector (M3.5 × 7 screws)
Applicable wire size	0.75 to 2mm^2 (14 AWG) (tightening torque: 7kg·cm)
Applicable solderless terminal	1.25-3 1.25-YS3A 2-S3 2-YS3A V1.25-3 V1.25-YS3A V2-S3 V2-YS3A

3.2 Input Units

3.2.1 Type AX11C 100V AC input unit (32 points, 6mA)

Specifications \ Type		AX11C	Terminal Arrangement
Input points		32 points	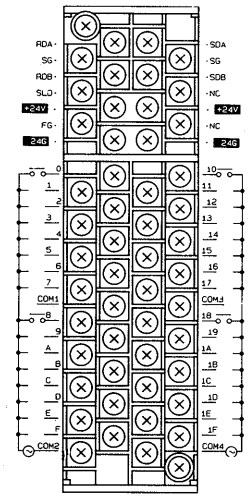
Insulation system		Photocoupler	
Rated input voltage		100—120V AC 50/60Hz	
Rated input current		Approx. 6mA (100V AC, 60Hz)	
Operating voltage range		85 to 132V AC (50/60Hz ±5%)	
Max. simultaneously ON		75% simultaneous ON (110V AC)	
Inrush current		Max. 200mA, within 1ms (132V AC)	
ON voltage/ON current		80V AC or higher/5mA or higher	
OFF voltage/OFF current		30V AC or lower/1mA or lower	
Input impedance		Approx. 18kΩ (60Hz), approx. 21kΩ (50Hz)	
Response time	OFF → ON	15ms or less (100V AC, 60Hz)	
	ON → OFF	30ms or less (100V AC, 60Hz)	
Common terminal arrangement		16 points/common (2 terminals)	
Number of occupied stations		4	
I/O module power supply (+24V, 24G terminal)	Voltage	15.6 to 31.2V DC	Weight: 0.62kg (1.36lb)
	Current	56mA or lower (at 24V, TYP)	

Terminal No.	Signal No.
TB1	RDA
TB2	SG
TB3	RDB
TB4	SLD
TB5	+24V
TB6	FG
TB7	24G
TB8	X0
TB9	X1
TB10	X2
TB11	X3
TB12	X4
TB13	X5
TB14	X6
TB15	X7
TB16	COM1
TB17	X8
TB18	X9
TB19	XA
TB20	XB
TB21	XC
TB22	XD
TB23	XE
TB24	XF
TB25	COM2

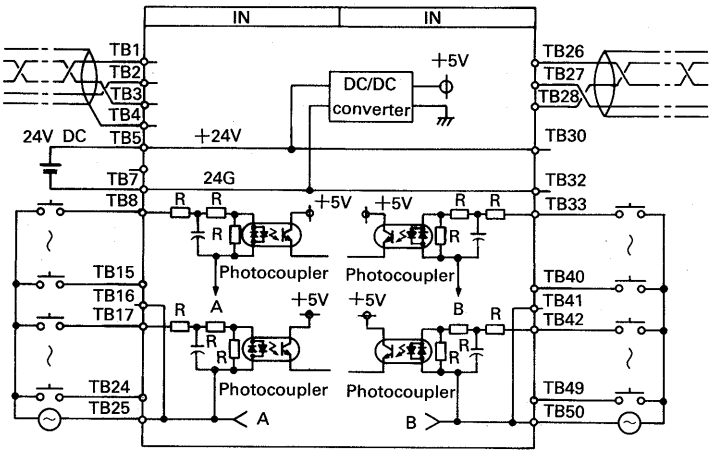

Terminal No.	Signal No.
TB26	SDA
TB27	SG
TB28	SDB
TB29	NC
TB30	+24V
TB31	NC
TB32	24G
TB33	X10
TB34	X11
TB35	X12
TB36	X13
TB37	X14
TB38	X15
TB39	X16
TB40	X17
TB41	COM3
TB42	X18
TB43	X19
TB44	X1A
TB45	X1B
TB46	X1C
TB47	X1D
TB48	X1E
TB49	X1F
TB50	COM4

3.2.2 Type AX21C 200V AC input unit (32 points, 5mA)

Specifications \ Type		AX21C	Terminal Arrangement
Input points		32 points	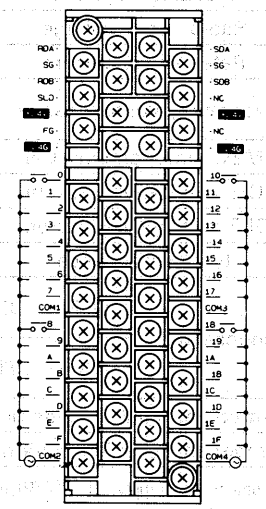
Insulation system		Photocoupler	
Rated input voltage		200—240V AC 50/60Hz	
Rated input current		Approx. 5mA (200V AC, 60Hz)	
Operating voltage range		170 to 264V AC (50/60Hz ±5%)	
Max. simultaneous ON		80% simultaneous ON (200V AC and 60Hz)	
Inrush current		Max. 500mA, 1ms or less (264V AC)	
ON voltage/ON current		80V AC or higher/3mA or higher	
OFF voltage/OFF current		30V AC or lower/0.8mA or higher	
Input impedance		Approx. 39kΩ (60Hz), approx. 46kΩ (50Hz)	
Response time	OFF → ON	30ms or less (200V AC, 60Hz)	
	ON → OFF	55ms or less (200V AC, 60Hz)	
Common terminal arrangement		16 points/common (2 terminals)	
Number of occupied stations		4	
I/O unit power supply (+24V, 24G terminal)	Voltage	15.6 to 31.2V DC	
	Current	58mA or lower (at 24V, TYP)	
Weight		0.65kg (1.43lb)	

External Connection

Terminal No.	Signal No.
TB1	RDA
TB2	SG
TB3	RDB
TB4	SLD
TB5	+24V
TB6	FG
TB7	24G
TB8	X0
TB9	X1
TB10	X2
TB11	X3
TB12	X4
TB13	X5
TB14	X6
TB15	X7
TB16	COM1
TB17	X8
TB18	X9
TB19	XA
TB20	XB
TB21	XC
TB22	XD
TB23	XE
TB24	XF
TB25	COM2

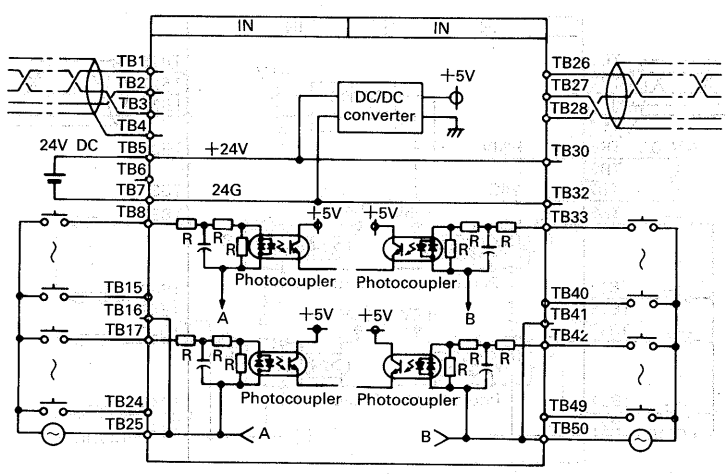

Terminal No.	Signal No.
TB26	SDA
TB27	SG
TB28	SDB
TB29	NC
TB30	+24V
TB31	NC
TB32	24G
TB33	X10
TB34	X11
TB35	X12
TB36	X13
TB37	X14
TB38	X15
TB39	X16
TB40	X17
TB41	COM3
TB42	X18
TB43	X19
TB44	X1A
TB45	X1B
TB46	X1C
TB47	X1D
TB48	X1E
TB49	X1F
TB50	COM4

* External wiring to input should be 50 m or less.

3.2.3 Type AX31C DC/AC input unit (32 points, 4mA/8.5mA)

Specifications \ Type		AX31C	
Input points		32 points	
Insulation system		Photocoupler	
Rated input voltage		12/24V DC	12/24V AC (50/60Hz)
Rated input current		4mA (12V AC/DC), 8.5mA (24V AC/DC)	
Operating voltage range		10.2 to 26.4V DC (ripple ratio: within 5%)	10.2 to 26.4V AC (50/60Hz ±5%)
Max. simultaneous ON		75% simultaneous ON (26.4V AC)	
ON voltage/ON current		7V DC/AC or higher/2mA or higher	
OFF voltage/OFF current		2.5V DC/AC or lower/0.7mA or lower	
Input impedance		Approx. 2.7kΩ	
Response time	OFF → ON	30ms or less (12/24V DC)	35ms or less (12/24V AC, 60Hz)
	ON → OFF	30ms or less (12/24V DC)	30ms or less (12/24V AC, 60Hz)
Common terminal arrangement		16 points/common (2 terminals)	
Number of occupied stations		4	
I/O unit power supply (+24V, 24G terminal)	Voltage	15.6 to 31.2V DC	
	Current	56mA or lower (at 24V, TYP)	
Weight		0.62kg (1.36lb)	

Terminal Arrangement

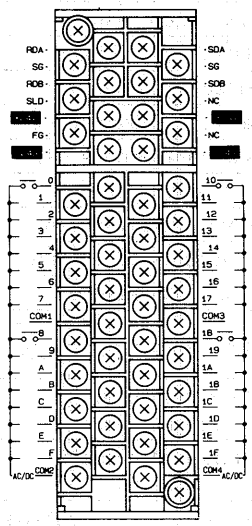

External Connection

Terminal No.	Signal No.
TB1	RDA
TB2	SG
TB3	RDB
TB4	SLD
TB5	+24V
TB6	FG
TB7	24G
TB8	X0
TB9	X1
TB10	X2
TB11	X3
TB12	X4
TB13	X5
TB14	X6
TB15	X7
TB16	COM1
TB17	X8
TB18	X9
TB19	XA
TB20	XB
TB21	XC
TB22	XD
TB23	XE
TB24	XF
TB25	COM2

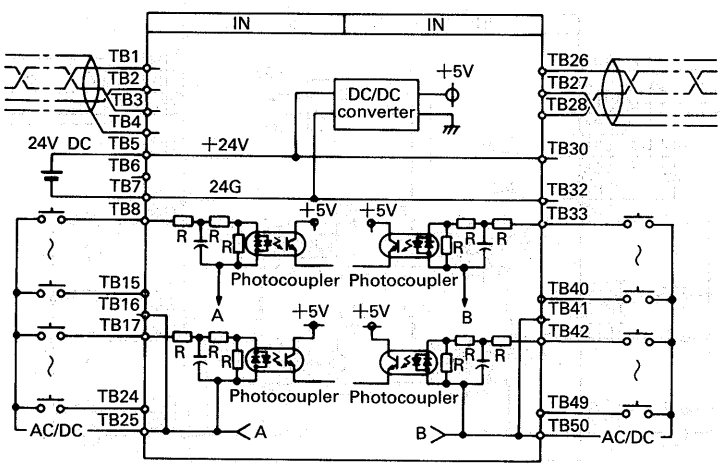

Terminal No.	Signal No.
TB26	SDA
TB27	SG
TB28	SDB
TB29	NC
TB30	+24V
TB31	NC
TB32	24G
TB33	X10
TB34	X11
TB35	X12
TB36	X13
TB37	X14
TB38	X15
TB39	X16
TB40	X17
TB41	COM3
TB42	X18
TB43	X19
TB44	X1A
TB45	X1B
TB46	X1C
TB47	X1D
TB48	X1E
TB49	X1F
TB50	COM4

3.2.4 Type AX41C 12/24V DC input unit (sink loading, 32 points, 3mA/7mA)

Specifications \ Type		AX41C		Terminal Arrangement
Input points		32 points		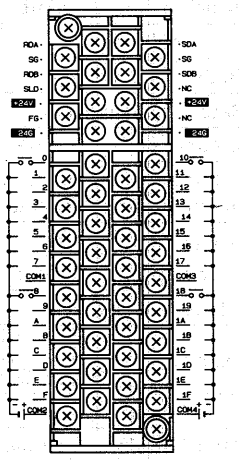
Insulation system		Photocoupler		
Rated input voltage		12V DC	24V DC	
Rated input current		Approx. 3mA	Approx. 7mA	
Operating voltage range		10.2 to 31.2V DC (ripple ratio: within 5%)		
Max. simultaneously ON		100% simultaneous ON (26.4V DC)		
ON voltage/ON current		8V DC or higher/2mA or higher		
OFF voltage/OFF current		4V DC or lower/1mA or lower		
Input resistance		Approx. 3.3kΩ		
Response time	OFF → ON	10ms or less (24V DC)		
	ON → OFF	10ms or less (24V DC)		
Common terminal arrangement		16 points/common (2 terminals)		
Number of occupied stations		4		
I/O module power supply (+24V, 24G terminal)	Voltage	15.6 to 31.2V DC		Weight: 0.6kg (1.32lb)
	Current	55mA or lower (at 24V, TYP)		

Terminal No.	Signal No.
TB1	RDA
TB2	SG
TB3	RDB
TB4	SLD
TB5	+24V
TB6	FG
TB7	24G
TB8	X0
TB9	X1
TB10	X2
TB11	X3
TB12	X4
TB13	X5
TB14	X6
TB15	X7
TB16	COM1
TB17	X8
TB18	X9
TB19	XA
TB20	XB
TB21	XC
TB22	XD
TB23	XE
TB24	XF
TB25	COM2

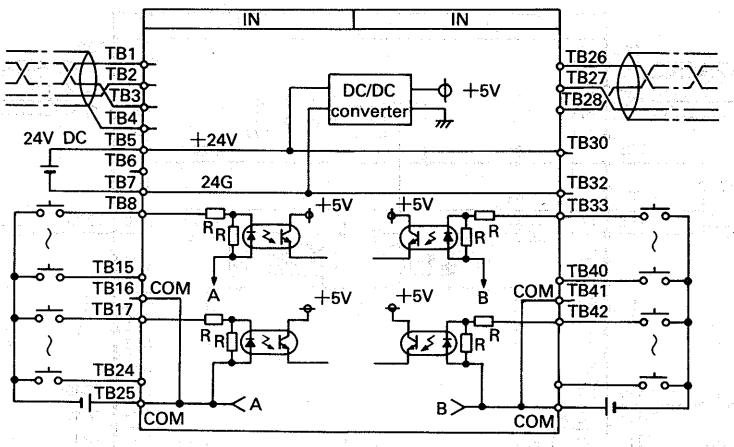

Terminal No.	Signal No.
TB26	SDA
TB27	SG
TB28	SDB
TB29	NC
TB30	+24V
TB31	NC
TB32	24G
TB33	X10
TB34	X11
TB35	X12
TB36	X13
TB37	X14
TB38	X15
TB39	X16
TB40	X17
TB41	COM3
TB42	X18
TB43	X19
TB44	X1A
TB45	X1B
TB46	X1C
TB47	X1D
TB48	X1E
TB49	X1F
TB50	COM4

3.2.5 Type AX81C 12/24V DC input unit (sink/source loading, 32 points, 3mA/7mA)

Specifications \ Type		AX81C	
Number of input points		32	
Isolation		Photocoupler	
Rated load voltage		12V DC	24V DC
Rated input current		Approx. 3mA	Approx. 7mA
Operating voltage range		10.2 to 31.2V DC (ripple ratio: within 5%)	
Number of Max. simultaneous input points		100% switched on simultaneously. At 26.4V DC	
ON voltage/ON current		8V or more/2mA or more	
OFF voltage/OFF current		4V max./1mA max.	
Input resistance		Approx. 3.3kΩ	
Response time	OFF to ON	10ms max. (24V DC)	
	ON to OFF	10ms max. (24V DC)	
Common		16 points/common (2 terminals)	
Number of stations occupied		4	
I/O module power supply	Voltage	15.6 to 31.2V DC	
	Current	55mA (TYP. 24V DC)	
Weight		0.6kg (1.32lb)	

Terminal Arrangement

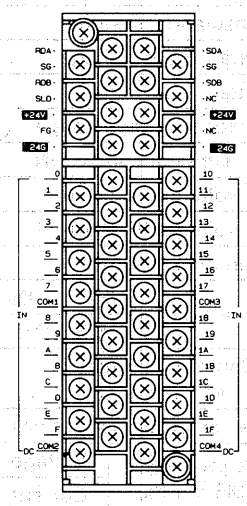

External Connection

Terminal Number	Signal
TB1	RDA
TB2	SG
TB3	RDB
TB4	SLD
TB5	+24V
TB6	FG
TB7	24G
TB8	X0
TB9	X1
TB10	X2
TB11	X3
TB12	X4
TB13	X5
TB14	X6
TB15	X7
TB16	COM1
TB17	X8
TB18	X9
TB19	XA
TB20	XB
TB21	XC
TB22	XD
TB23	XE
TB24	XF
TB25	COM2

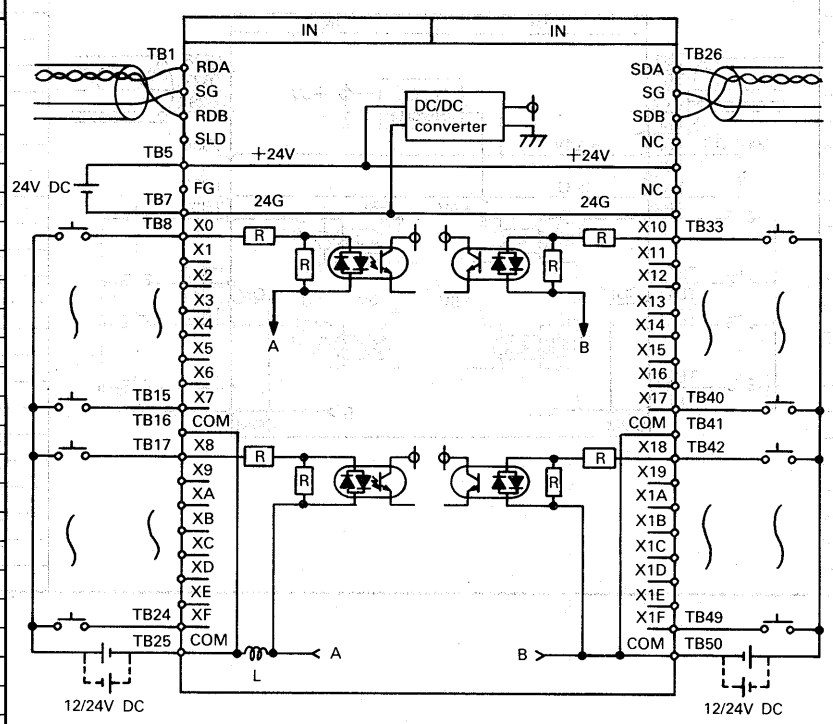

Terminal Number	Signal
TB26	SDA
TB27	SG
TB28	SDB
TB29	NC
TB30	+24V
TB31	NC
TB32	24G
TB33	X10
TB34	X11
TB35	X12
TB36	X13
TB37	X14
TB38	X15
TB39	X16
TB40	X17
TB41	COM3
TB42	X18
TB43	X19
TB44	X1A
TB45	X1B
TB46	X1C
TB47	X1D
TB48	X1E
TB49	X1F
TB50	COM4

3.3 Output Units

3.3.1 Type AY13C relay output unit (24V DC/100-240V AC, 32 points, 0.5A)

Specifications \ Type		AY13C
Output points		32 points
Insulation system		Photocoupler
Rated switching voltage, current		24V DC (resistance load) / 2A/1 point 240V AC (cos ϕ =1) / 4A/1 common
Min. switching load		5V DC 1mA
Max. switching voltage		250V AC, 110V DC
Leakage current (OFF)		0mA
Response time	OFF → ON	10ms or less
	ON → OFF	12ms or less
Life	Mechanical	20 million times or more
	Electrical*1	At rated switching voltage/ current load 100 thousand times or more
		200V AC 1.5A, 240V AC 1A (COS ϕ =0.7) 100 thousand times or more
		200V AC 1A, 240V AC 0.5A (COS ϕ =0.35) 100 thousand times or more
		24V DC 1A, 100V DC 0.1A (L/R=7ms) 100 thousand times or more
Max. switching frequency*1		3500 times/hour
External power supply requirement (CTL+, CTLG terminal)*	Voltage	24V DC ±10% Ripple voltage 4Vp-p or less
	Current	184mA (24V DC TYP. all points ON)
Surge killer		Not provided
Common terminal arrangement		8 points/common
Number of occupied stations		4
I/O module power supply (+24V, 24G terminal)	Voltage	15.6 to 31.2V DC
	Current	90mA or lower (at 24V, TYP)

Terminal Arrangement

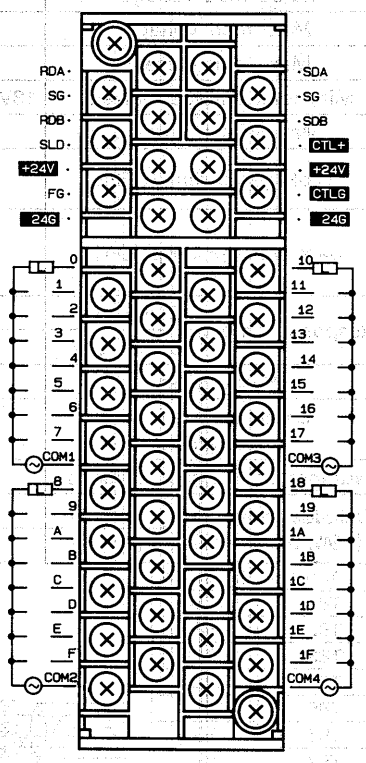

Weight	0.7kg (1.54lb)

Terminal No.	Signal No.
TB1	RDA
TB2	SG
TB3	RDB
TB4	SLD
TB5	+24V
TB6	FG
TB7	24G
TB8	Y0
TB9	Y1
TB10	Y2
TB11	Y3
TB12	Y4
TB13	Y5
TB14	Y6
TB15	Y7
TB16	COM1
TB17	Y8
TB18	Y9
TB19	YA
TB20	YB
TB21	YC
TB22	YD
TB23	YE
TB24	YF
TB25	COM2

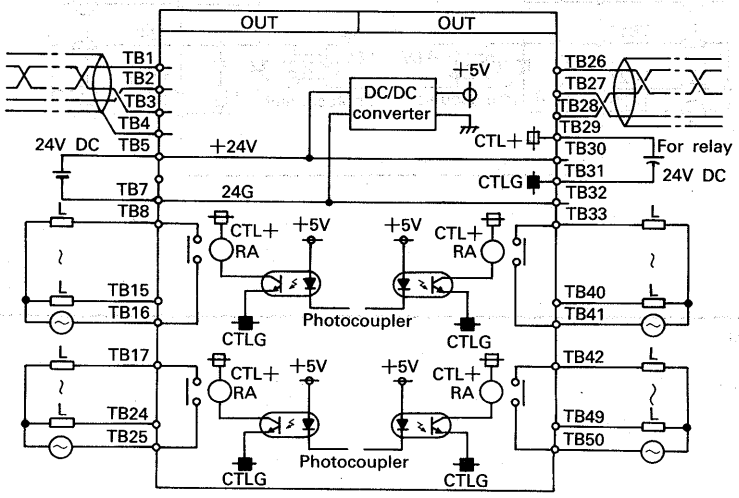

Terminal No.	Signal No.
TB26	SDA
TB27	SG
TB28	SDB
TB29	CTL+
TB30	+24V
TB31	CTLG
TB32	24G
TB33	Y10
TB34	Y11
TB35	Y12
TB36	Y13
TB37	Y14
TB38	Y15
TB39	Y16
TB40	Y17
TB41	COM3
TB42	Y18
TB43	Y19
TB44	Y1A
TB45	Y1B
TB46	Y1C
TB47	Y1D
TB48	Y1E
TB49	Y1F
TB50	COM4

* : Power supply for driving relay coil.
*1 : See Section 2.2.

3.3.2 * Type AY23C triac output unit (100-240V AC, 32 points, 0.3A)

Specifications \ Type		AY23C	Terminal Arrangement
Output points		32 points	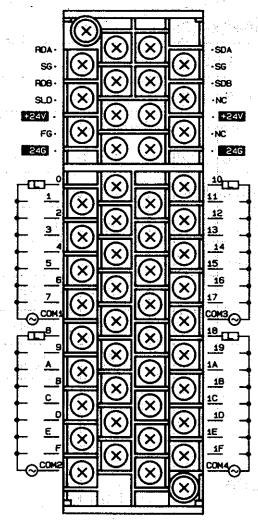
Insulation system		Photocoupler	
Rated load voltage		100—240V AC, 40 to 70Hz	
Max. load voltage		264V AC	
Max. load current		0.3A/point (60% simultaneous ON)	
Min. load voltage, current		18V AC 10mA, 100V AC 10mA, 240V AC 10mA	
Max. inrush current		20A 10ms or shorter	
Leakage current (OFF)		Approx. 1.5mA (120V AC 60Hz) Approx. 3.0mA (240V AC 60Hz)	
Max. voltage drop (ON)		1.5V or lower (100 to 300mA) 1.8V or lower (50 to 100mA) 2.5V or lower (10 to 50mA)	
Response time	OFF → ON	1ms or less	
	ON → OFF	0.5 cycles + 1ms or less	
Surge killer		CR absorber (0.01 μF + 68Ω)	
Common terminal arrangement		8 points/common	
Number of occupied stations		4	
I/O module power supply (+24V, 24G terminal)	Voltage	15.6 to 31.2V DC	Weight: 0.75kg (1.65lb)
	Current	180mA or lower (at 24V, TYP)	

Terminal No.	Signal No.
TB1	RDA
TB2	SG
TB3	RDB
TB4	SLD
TB5	+24V
TB6	FG
TB7	24G
TB8	Y0
TB9	Y1
TB10	Y2
TB11	Y3
TB12	Y4
TB13	Y5
TB14	Y6
TB15	Y7
TB16	COM1
TB17	Y8
TB18	Y9
TB19	YA
TB20	YB
TB21	YC
TB22	YD
TB23	YE
TB24	YF
TB25	COM2

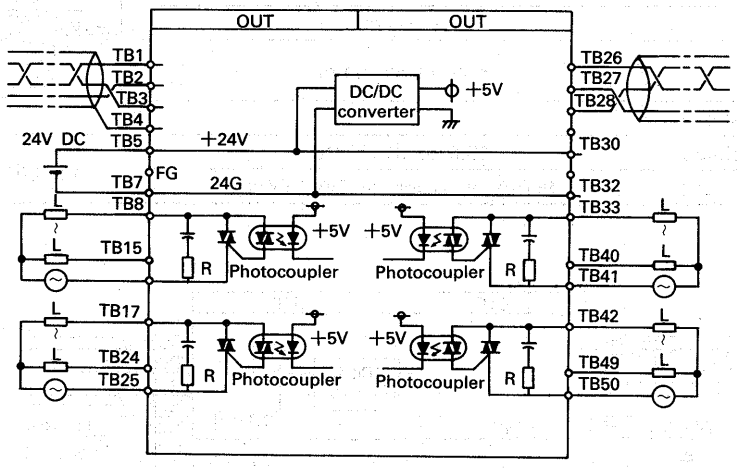

Terminal No.	Signal No.
TB26	SDA
TB27	SG
TB28	SDB
TB29	NC
TB30	+24V
TB31	NC
TB32	24G
TB33	Y10
TB34	Y11
TB35	Y12
TB36	Y13
TB37	Y14
TB38	Y15
TB39	Y16
TB40	Y17
TB41	COM3
TB42	Y18
TB43	Y19
TB44	Y1A
TB45	Y1B
TB46	Y1C
TB47	Y1D
TB48	Y1E
TB49	Y1F
TB50	COM4

* : See Section 5.2.2, Example 4.

3.3.3 Type AY51C transistor output unit (sink loading, 12/24V DC, 32 points, 0.3A)

Specifications \ Type		AY51C	Terminal Arrangement
Output points		32 points	
Insulation system		Photocoupler	
Rated load voltage		12/24V DC	
Operating load voltage range		10.2 to 31.2V DC	
Max. load current		0.3A/point (75% simultaneous ON)	
Max. inrush current		1.2A 10ms or shorter	
Leakage current (OFF)		0.1mA or lower	
Max. voltage drop (ON)		0.9V (TYP) 0.3A, 1.5V (MAX.) 0.3A	
Type of output		Sink loading	
Response time	OFF → ON	2ms or less	
	ON → OFF	2ms or less (resistive load)	
External power supply requirement (CTL+, CTLG terminal)	Voltage	12/24V DC (10.2 to 31.2V DC)	
	Current	64mA (24V DC)	
Surge killer		Zener diode	
Common terminal arrangement		32 points/common (4 terminals)	
Number of occupied stations		4	
I/O module power supply (+24V, 24G terminal)	Voltage	15.6 to 31.2V DC	Weight: 0.7kg (1.54lb)
	Current	93mA or lower (at 24V, TYP)	

Terminal No.	Signal No.
TB1	RDA
TB2	SG
TB3	RDB
TB4	SLD
TB5	+24V
TB6	FG
TB7	24G
TB8	Y0
TB9	Y1
TB10	Y2
TB11	Y3
TB12	Y4
TB13	Y5
TB14	Y6
TB15	Y7
TB16	COM1
TB17	Y8
TB18	Y9
TB19	YA
TB20	YB
TB21	YC
TB22	YD
TB23	YE
TB24	YF
TB25	COM2

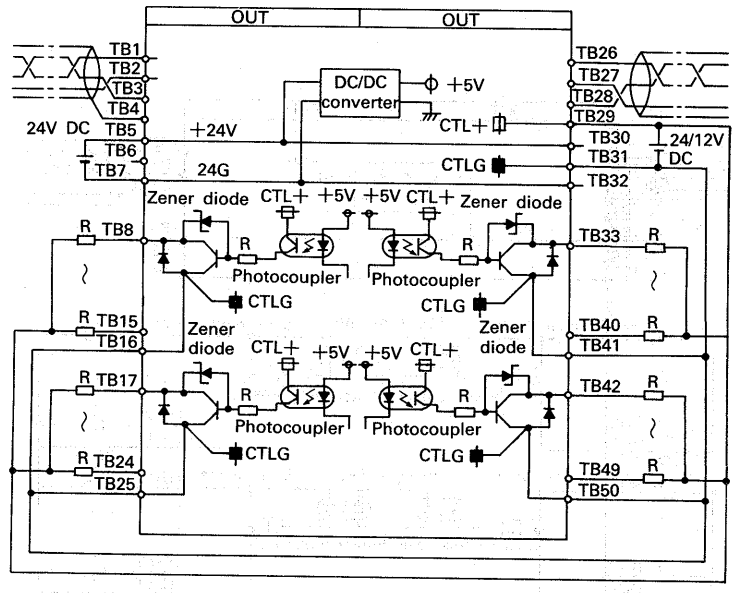

Terminal No.	Signal No.
TB26	SDA
TB27	SG
TB28	SDB
TB29	CTL+
TB30	+24V
TB31	CTLG
TB32	24G
TB33	Y10
TB34	Y11
TB35	Y12
TB36	Y13
TB37	Y14
TB38	Y15
TB39	Y16
TB40	Y17
TB41	COM3
TB42	Y18
TB43	Y19
TB44	Y1A
TB45	Y1B
TB46	Y1C
TB47	Y1D
TB48	Y1E
TB49	Y1F
TB50	COM4

3.3.4 Type AY61CE transistor output unit (5 to 24V DC, 32 points, 1.0A, source loading)

Specifications \ Type		AY61CE	Terminal Arrangement
Input points		32 points	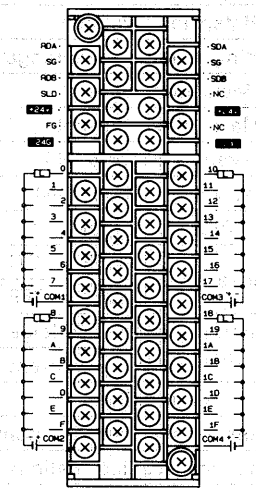
Insulation system		Photocoupler	
Rated load voltage		5V/12V/24V DC	
Rated load voltage range		4.5 to 26.4V DC	
Max. load current		1.0A/point, 4A/common	
Max. inrush current		8A, 10ms or less	
Leakage current at OFF		0.1mA or lower	
Max. voltage drop at ON		0.13V (TYP), 1.0 A 0.2V (Max.),1.0 A	
Output type		Source loading	
Response time	OFF → ON	2ms or less	
	ON → OFF	10ms or less (resistance load)	
Surge killer		Zener diode	
Common terminal arrangement		8 points/common (4 terminals)	
Number of occupied stations		4	
I/O unit power supply (+24V, 24G terminal)	Voltage	15.6 to 31.2V DC	
	Current	150mA or lower (at 24V, TYP)	
Weight		0.7kg (1.54lb)	

External Connection

Terminal Number	Signal
TB1	RDA
TB2	SG
TB3	RDB
TB4	SLD
TB5	+24V
TB6	FG
TB7	24G
TB8	Y0
TB9	Y1
TB10	Y2
TB11	Y3
TB12	Y4
TB13	Y5
TB14	Y6
TB15	Y7
TB16	COM1
TB17	Y8
TB18	Y9
TB19	YA
TB20	YB
TB21	YC
TB22	YD
TB23	YE
TB24	YF
TB25	COM2

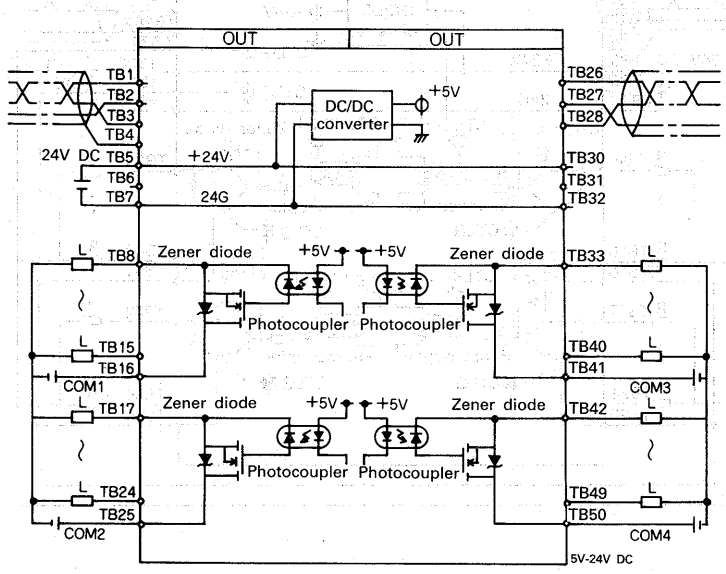

Terminal Number	Signal
TB26	SDA
TB27	SG
TB28	SDB
TB29	NC
TB30	+24V
TB31	NC
TB32	24G
TB33	Y10
TB34	Y11
TB35	Y12
TB36	Y13
TB37	Y14
TB38	Y15
TB39	Y16
TB40	Y17
TB41	COM3
TB42	Y18
TB43	Y19
TB44	Y1A
TB45	Y1B
TB46	Y1C
TB47	Y1D
TB48	Y1E
TB49	Y1F
TB50	COM4

3.3.5 Type AY81C transistor output unit (24V DC, 32 points, 0.5A)

Specifications \ Type		AY81C	Terminal Arrangement
Number of output points		32	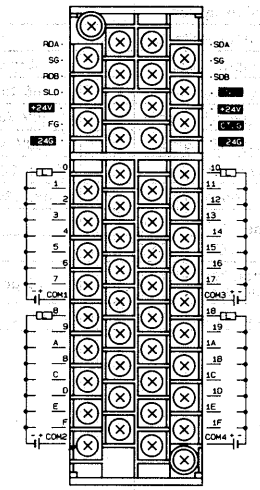
Isolation		Photocoupler	
Rated load voltage		24V DC	
Operating load voltage range		21.6 to 26.4V DC	
Max. load current		0.5A/point (60% switched on simultaneously)	
Max. inrush current		2A, 10 msec or less	
Leakage urrent at OFF		0.1mA max.	
Max. voltage drop at ON		0.9 (TYP) 0.5A, 1.5V (MAX) 0.5A	
Output type		Source loading	
Response time	OFF to ON	2ms max.	
	ON to OFF	2ms max. (resistance load)	
Surge suppression		Zener diode	
Common		32 points/common (4 terminal)	
Number of stations occupied		4	
I/O module power supply	Voltage	15.6 to 31.2V DC	
	Current	100mA (TYP. 24V DC)	
Output exterminal supply power	Voltage	24V DC (21.6 to 26.4V DC)	
	Current	17mA (TYP. 24V DC)	
Weight		0.7kg (1.54lb)	

External Connection

Terminal Number	Signal
TB1	RDA
TB2	SG
TB3	RDB
TB4	SLD
TB5	+24V
TB6	FG
TB7	24G
TB8	Y0
TB9	Y1
TB10	Y2
TB11	Y3
TB12	Y4
TB13	Y5
TB14	Y6
TB15	Y7
TB16	COM1
TB17	Y8
TB18	Y9
TB19	YA
TB20	YB
TB21	YC
TB22	YD
TB23	YE
TB24	YF
TB25	COM2

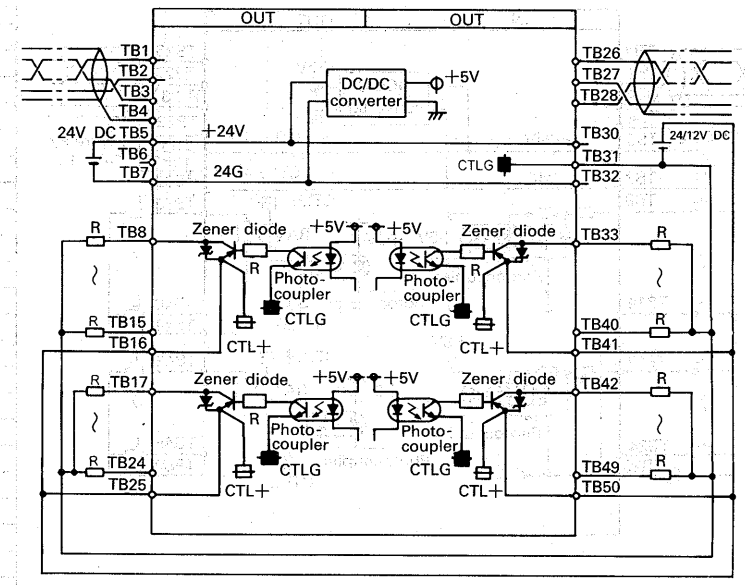

Terminal Number	Signal
TB26	SDA
TB27	SG
TB28	SDB
TB29	NC
TB30	+24V
TB31	CTLG
TB32	24G
TB33	Y10
TB34	Y11
TB35	Y12
TB36	Y13
TB37	Y14
TB38	Y15
TB39	Y16
TB40	Y17
TB41	COM3
TB42	Y18
TB43	Y19
TB44	Y1A
TB45	Y1B
TB46	Y1C
TB47	Y1D
TB48	Y1E
TB49	Y1F
TB50	COM4

3.4 I/O Units

3.4.1 Type AX10Y10C I/O unit (100V AC, input:16 points, relay output:16 points)

INPUT SPECIFICATIONS		
Input points		16 points
Insulation system		Photocoupler
Rated input voltage		100−120V AC 50/60Hz
Rated input current		Approx. 6mA (100V AC, 60Hz)
Operating voltage range		85 to 132V AC (50/60Hz ±5%)
ON voltage/ON current		80V AC or higher/5mA or higher
OFF voltage/OFF current		30V AC or lower/1mA or lower
Inrush current		Max. 200mA, within 1ms (132V AC)
Input impedance		Approx. 18kΩ (60Hz), approx. 21kΩ (50Hz)
Response time	OFF → ON	15ms or less
	ON → OFF	30ms or less
Common terminal arrangement		16 points/common (2 terminals)
Max. simultaneously ON		100 % simultaneous ON (110V AC)

OUTPUT SPECIFICATIONS		
Output points		16 points
Insulation system		Photocoupler
Rated switching voltage, current		24V DC (resistance load) / 2A/point 240V AC (cos φ =1) / 4A/common
Min. switching load		5V DC/1mA
Max. switching voltage		250V AC, 110V DC
Max. switching frequency		3600 times/hour
Life	Mechanical	20 million times or more
	Electrical	At rated switching voltage/current load 100 thousand times or more
		200V AC 1.5A, 240V AC 1A (COS φ =0.7) 100 thousand times or more
		200V AC 1A, 240V AC 0.5A (COS φ =0.35) 100 thousand times or more
		24V DC 1A, 100V DC 0.1A (L/R=7ms) 100 thousand times or more
Response time	OFF → ON	10ms or less
	ON → OFF	12ms or less
External power supply requirement (CTL+, CTLG terminal)	Voltage	24V DC ±10% Ripple voltage 4Vp-p or less
	Current	92mA (24V DC TYP. all points ON)
Surge killer		Not provided
Common terminal arrangement		8 points/common

Number of occupied stations		4
I/O module power supply (+24V, 24G terminal)	Voltage	15.6 to 31.2V DC
	Current	74mA or lower (at 24V, TYP)
Weight		0.66kg (1.45lb)

Terminal No.	Signal No.
TB1	RDA
TB2	SG
TB3	RDB
TB4	SLD
TB5	+24V
TB6	FG
TB7	24G
TB8	X0
TB9	X1
TB10	X2
TB11	X3
TB12	X4
TB13	X5
TB14	X6
TB15	X7
TB16	COM1
TB17	X8
TB18	X9
TB19	XA
TB20	XB
TB21	XC
TB22	XD
TB23	XE
TB24	XF
TB25	COM2

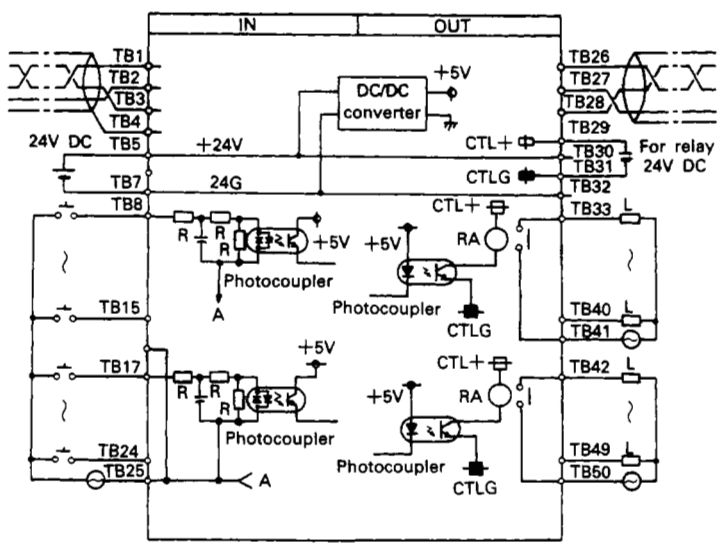

Terminal No.	Signal No.
TB26	SDA
TB27	SG
TB28	SDB
TB29	CTL+
TB30	+24V
TB31	CTLG
TB32	24G
TB33	Y10
TB34	Y11
TB35	Y12
TB36	Y13
TB37	Y14
TB38	Y15
TB39	Y16
TB40	Y17
TB41	COM3
TB42	Y18
TB43	Y19
TB44	Y1A
TB45	Y1B
TB46	Y1C
TB47	Y1D
TB48	Y1E
TB49	Y1F
TB50	COM4

* : Power supply for driving relay coil.

3.4.2 Type AX40Y10C I/O unit (12/24V DC, input:16 points, relay output:16 points)

INPUT SPECIFICATIONS			
Input points		16 points	
Insulation system		Photocoupler	
Rated input voltage		12V DC	24V DC
Rated input current		Approx. 3mA	Approx. 7mA
Operating voltage range		10.2 to 31.2V DC (ripple ratio: within 5%)	
ON voltage/ON current		8V DC or higher/2mA or higher	
OFF voltage/OFF current		4V DC or lower/1mA or lower	
Input resistance		Approx. 3.3kΩ	
Type of input		Sink loading	
Response time	OFF → ON	10ms or less (24V DC)	
	ON → OFF	10ms or less (24V DC)	
Common terminal arrangement		16 points/common (2 terminals)	
Max. simultaneously ON		100% simultaneous ON (26.4V DC)	

OUTPUT SPECIFICATIONS		
Output points		16 points
Insulation system		Photocoupler
Rated switching voltage, current		24V DC (resistance load) / 2A/point 240V AC (cos φ =1) / 4A/common
Min. switching load		5V DC/1mA
Max. switching voltage		250V AC, 110V DC
Max. switching frequency		3600 times/hour
Life	Mechanical	20 million times or more
	Electrical	At rated switching voltage/current load 100 thousand times or more
		200V AC 1.5A, 240V AC 1A (COS φ =0.7) 100 thousand times or more
		200V AC 1A, 240V AC 0.5A (COS φ =0.35) 100 thousand times or more
		24V DC 1A, 100V DC 0.1A (L/R=7ms) 100 thousand times or more
Response time	OFF → ON	10ms or less
	ON → OFF	12ms or less
External power* supply requirement (CTL+, CTLG terminal)	Voltage	24V DC ±10% Ripple voltage 4Vp-p or less
	Current	92mA (24V DC TYP. all points ON)
Surge killer		Not provided
Common terminal arrangement		8 points/common

Number of occupied stations		4
I/O module power supply (+24V, 24G terminal)	Voltage	15.6 to 31.2V DC
	Current	72mA or lower (at 24V, TYP)
Weight		0.65kg (1.43lb)

Terminal No.	Signal No.
TB1	RDA
TB2	SG
TB3	RDB
TB4	SLD
TB5	+24V
TB6	FG
TB7	24G
TB8	X0
TB9	X1
TB10	X2
TB11	X3
TB12	X4
TB13	X5
TB14	X6
TB15	X7
TB16	COM1
TB17	X8
TB18	X9
TB19	XA
TB20	XB
TB21	XC
TB22	XD
TB23	XE
TB24	XF
TB25	COM2

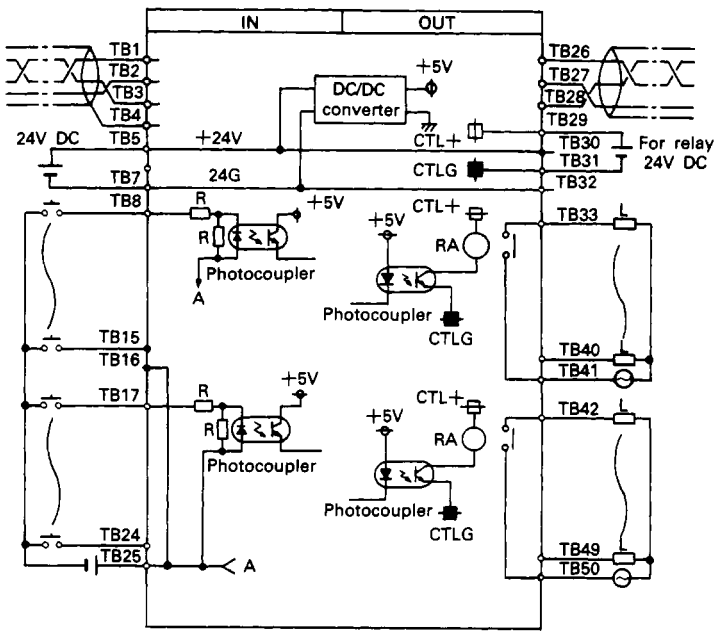

Terminal No.	Signal No.
TB26	SDA
TB27	SG
TB28	SDB
TB29	CTL+
TB30	+24V
TB31	CTLG
TB32	24G
TB33	Y10
TB34	Y11
TB35	Y12
TB36	Y13
TB37	Y14
TB38	Y15
TB39	Y16
TB40	Y17
TB41	COM3
TB42	Y18
TB43	Y19
TB44	Y1A
TB45	Y1B
TB46	Y1C
TB47	Y1D
TB48	Y1E
TB49	Y1F
TB50	COM4

* : Power supply for driving relay coil.

3.4.3 Type AX18Y22C I/O unit (100V AC, input:16 points, *triac output:16 points)

INPUT SPECIFICATIONS			OUTPUT SPECIFICATIONS		
Input points		16 points	Output points		16 points
Insulation system		Photocoupler	Insulation system		Photocoupler
Rated input voltage		100−120V AC 50/60Hz	Rated load voltage		100−240V AC 40 to 70Hz
Rated input current		Approx. 6mA (100V AC, 60Hz)	Max. load voltage		264V AC
Operating voltage range		85 to 132V AC (50/60Hz ±5%)	Max. load current		0.3A/point (75% simultaneous ON)
ON voltage/ON current		80V AC or higher/5mA or higher	Min. load voltage, current		18V AC 10mA, 100V/240V AC 10mA
OFF voltage/OFF current		30V AC or lower/1mA or lower	Max. inrush current		20A 10ms or shorter
Inrush current		Max. 200mA, within 1ms (132V AC)	Leakage current (OFF)		Approx. 1.5mA (120V AC 60Hz) Approx. 3.0mA (240V AC 60Hz)
Input impedance		Approx. 18kΩ (60Hz), approx. 21kΩ (50Hz)	Max. voltage drop (ON)		1.5V or lower (0.1 to 0.3A), 1.8V or lower (50 to 100mA), 2.5V or lower (10 to 50mA)
Response time	OFF → ON	15ms or less (100V AC 60Hz)	Response time	OFF → ON	1ms or less
	ON → OFF	30ms or less (100V AC 60Hz)		ON → OFF	0.5 cycles + 1ms or less
Common terminal arrangement		16 points/common (2 terminals)	Surge killer		CR absorber (0.01μF+68Ω)
Max. simultaneously ON		60% simultaneous ON (110V AC)	Common terminal arrangement		8 points/common
Number of occupied stations		4			
I/O module power supply (+24V, 24G terminal)	Voltage	15.6 to 31.2V DC			
	Current	116mA or lower (at 24V, TYP)			
Weight		0.68kg (1.50lb)			

Terminal No.	Signal No.
TB1	RDA
TB2	SG
TB3	RDB
TB4	SLD
TB5	+24V
TB6	FG
TB7	24G
TB8	X0
TB9	X1
TB10	X2
TB11	X3
TB12	X4
TB13	X5
TB14	X6
TB15	X7
TB16	COM1
TB17	X8
TB18	X9
TB19	XA
TB20	XB
TB21	XC
TB22	XD
TB23	XE
TB24	XF
TB25	COM2

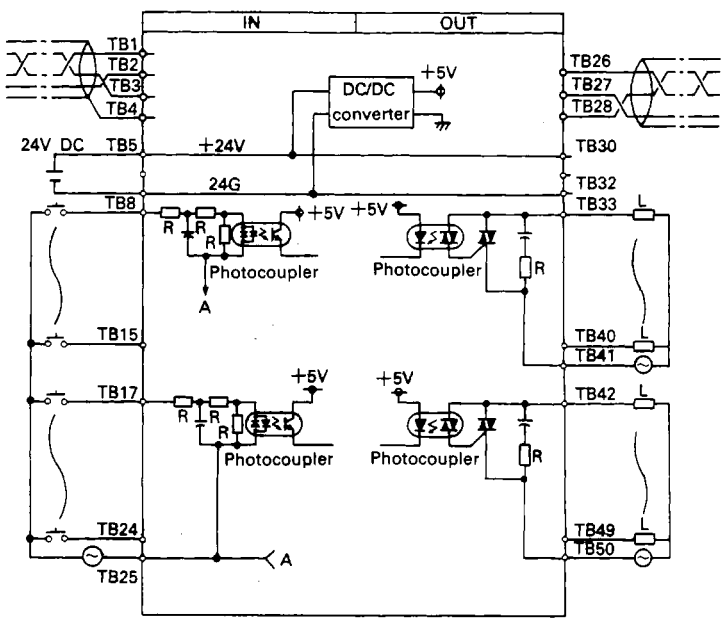

Terminal No.	Signal No.
TB26	SDA
TB27	SG
TB28	SDB
TB29	NC
TB30	+24V
TB31	NC
TB32	24G
TB33	Y10
TB34	Y11
TB35	Y12
TB36	Y13
TB37	Y14
TB38	Y15
TB39	Y16
TB40	Y17
TB41	COM3
TB42	Y18
TB43	Y19
TB44	Y1A
TB45	Y1B
TB46	Y1C
TB47	Y1D
TB48	Y1E
TB49	Y1F
TB50	COM4

* : See 5.3.2, Example 4.

3.4.4 Type AX40Y50C I/O unit (12/24V DC, input:16 points, transistor output:16 points)

INPUT SPECIFICATIONS		
Input points		16 points
Insulation system		Photocoupler
Rated input voltage		12V DC / 24V DC
Rated input current		3mA / 7mA
Operating voltage range		10.2 to 31.2V DC (ripple ratio: within 5%)
ON voltage/ON current		8V DC or higher/2mA or higher
OFF voltage/OFF current		4V DC or lower/1mA or lower
Input resistance		Approx. 3.3kΩ
Type of input		Sink loading
Response time	OFF → ON	10ms or less
	ON → OFF	10ms or less
Common terminal arrangement		16 points/common (2 terminals)
Max. simultaneously ON		60% simultaneous ON (26.4V DC)

OUTPUT SPECIFICATIONS		
Output points		16 points
Insulation system		Photocoupler
Rated load voltage		12/24V DC
Operating load voltage range		10.2 to 31.2V DC
Max. load current		0.3A/point (75% simultaneous ON)
Max. inrush current		1.2A 10ms or shorter
Leakage current (OFF)		0.1mA or lower
Max. voltage drop (ON)		0.9V (TYP.) 0.3A, 1.5V (MAX.) 0.3A
Type of output		Sink loading
Response time	OFF → ON	2ms or less
	ON → OFF	2ms or less (resistive load)
External power supply requirement (CTL+, CTLG terminal)	Voltage	12/24V DC (10.2 to 31.2V DC)
	Current	64mA (TYP. 24V DC per common)
Surge killer		Zener diode
Common terminal arrangement		16 points/common (2 terminals)

Number of occupied stations		4
I/O module power supply (+24V, 24G terminal)	Voltage	15.6 to 31.2V DC
	Current	74mA or lower (at 24V, TYP)
Weight		0.65kg (1.43lb)

Terminal No.	Signal No.
TB1	RDA
TB2	SG
TB3	RDB
TB4	SLD
TB5	+24V
TB6	FG
TB7	24G
TB8	X0
TB9	X1
TB10	X2
TB11	X3
TB12	X4
TB13	X5
TB14	X6
TB15	X7
TB16	COM1
TB17	X8
TB18	X9
TB19	XA
TB20	XB
TB21	XC
TB22	XD
TB23	XE
TB24	XF
TB25	COM2

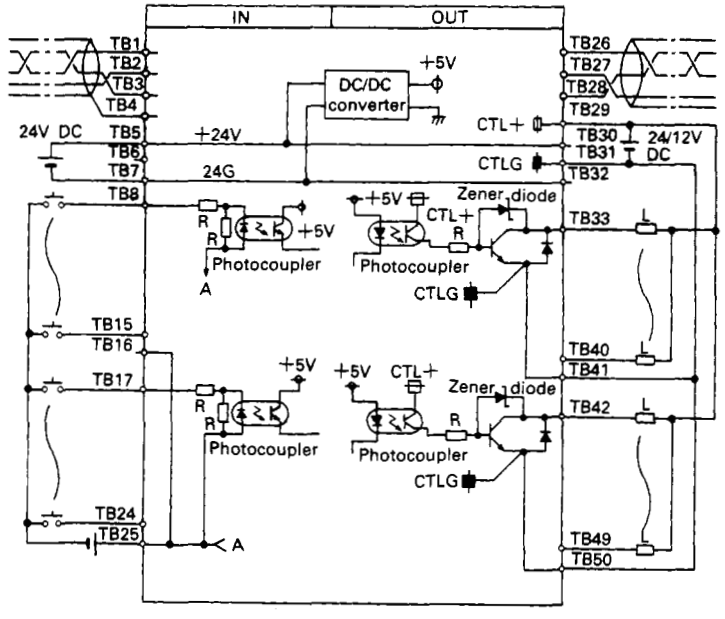

Terminal No.	Signal No.
TB26	SDA
TB27	SG
TB28	SDB
TB29	CTL+
TB30	+24V
TB31	CTLG
TB32	24G
TB33	Y10
TB34	Y11
TB35	Y12
TB36	Y13
TB37	Y14
TB38	Y15
TB39	Y16
TB40	Y17
TB41	COM3
TB42	Y18
TB43	Y19
TB44	Y1A
TB45	Y1B
TB46	Y1C
TB47	Y1D
TB48	Y1E
TB49	Y1F
TB50	COM4

3.4.5 Type AX80Y10C I/O unit (12/24V DC, input: 16 points/relay output: 16 points)

INPUT SPECIFICATIONS			
Input points		16 points	
Insulation system		Photocoupler	
Rated input voltage		12V DC	24V DC
Rated input current		Approx. 3mA	Approx. 7mA
Operating voltage range		10.2 to 31.2V DC (ripple ratio: within 5%)	
ON voltage/ON current		8V DC or higher/2mA or higher	
OFF voltage/OFF current		4V DC or lower/1mA or lower	
Input resistance		Approx. 3.3kΩ	
Type of input		Sink/source loading	
Response time	OFF → ON	10ms or less (24V DC)	
	ON → OFF	10ms or less (24V DC)	
Common terminal arrangement		16 points/common (2 terminals)	
Max. simultaneous ON		100% simultaneous ON (26.4V DC)	
Number of occupied stations		4	
I/O unit power supply (+24V, 24G terminal)	Voltage	15.6 to 31.2V DC	
	Current	72mA or lower (at 24V, TYP)	
Weight		0.65kg (1.43lb)	

OUTPUT SPECIFICATIONS		
Output points		16 points
Insulation system		Photocoupler
Rated switching voltage, current		24V DC (resistance load) 2A/point 240V AC (cos φ =1) 4A/common
Max. switching load		5V DC/1mA
Max. switching voltage		250V AC, 110V DC
Max. switching frequency		3600 times/hour
Life	Mechanical	20 million times or more
	Electrical	At rated switching voltage/current load 100 thousand times or more
		200V DC 1.5A, 240V AC 1A (cos φ =0.7) 100 thousand times or more
		200V DC 1A, 240V AC 0.5A (cos φ =0.35) 100 thousand times or more
		24V DC 1A, 100V DC 0.1A (L/R7 msec) 100 thousand times or more
Response time	OFF → ON	10ms or less
	ON → OFF	12ms or less
External power supply* requirement (CTL+, CTLG terminal)		24V DC ±10%, Ripple voltage 4Vp-p or less 92mA (24V DC TYP. all points ON)
Surge killer		Not provided
Common terminal arrangement		8 points/common

Terminal No.	Signal No.
TB1	RDA
TB2	SG
TB3	RDB
TB4	SLD
TB5	+24V
TB6	FG
TB7	24G
TB8	X0
TB9	X1
TB10	X2
TB11	X3
TB12	X4
TB13	X5
TB14	X6
TB15	X7
TB16	COM1
TB17	X8
TB18	X9
TB19	XA
TB20	XB
TB21	XC
TB22	XD
TB23	XE
TB24	XF
TB25	COM2

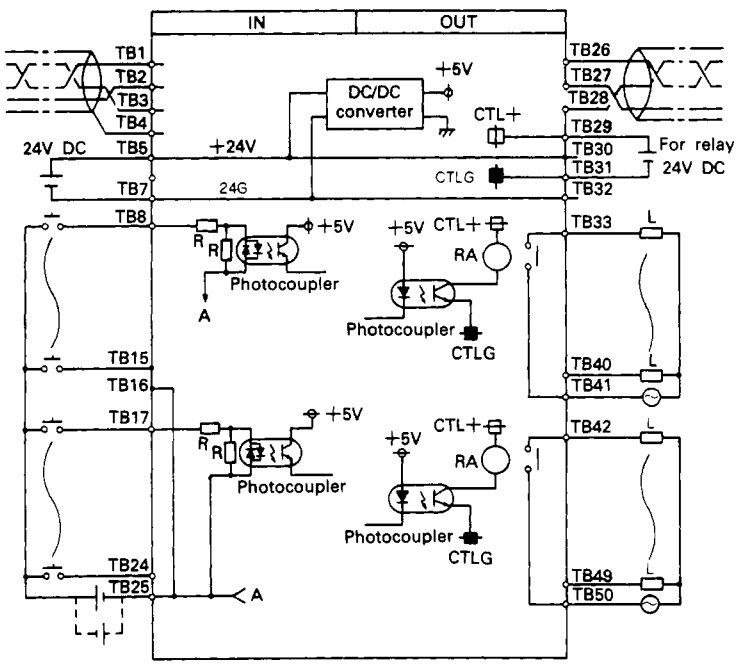

Terminal No.	Signal No.
TB26	SDA
TB27	SG
TB28	SDB
TB29	CTL+
TB30	+24V
TB31	CTLG
TB32	24G
TB33	Y10
TB34	Y11
TB35	Y12
TB36	Y13
TB37	Y14
TB38	Y15
TB39	Y16
TB40	Y17
TB41	COM3
TB42	Y18
TB43	Y19
TB44	Y1A
TB45	Y1B
TB46	Y1C
TB47	Y1D
TB48	Y1E
TB49	Y1F
TB50	COM4

• : Power supply for driving relay coil.
*1 : See Section 2.2.

3.4.6 Type AX80Y80C I/O unit (12/24V DC, input: 16 points/transistor output: 16 points)

INPUT SPECIFICATIONS			
Input points		16 points	
Insulation system		Photocoupler	
Rated input voltage		12V DC	24V DC
Rated input current		Approx. 3mA	Approx. 7mA
Operating voltage range		10.2 to 31.2V DC (ripple ratio: within 5%)	
ON voltage/ON current		8V DC or higher/2mA or higher	
OFF voltage/OFF current		4V DC or lower/1mA or lower	
Input resistance		Approx. 3.3kΩ	
Input type		Sink/source loading	
Response time	OFF → ON	10 ms or less (24V DC)	
	ON → OFF	10 ms or less (24V DC)	
Common terminal arrangement		16 points/common (2 terminals)	
Max. simultaneous ON		60% simultaneous ON (26.4V DC)	

OUTPUT SPECIFICATIONS		
Output points		16 points
Insulation system		Photocoupler
Rated switching voltage, current		24V DC
Operating load voltage range		21.6 to 26.4V DC
Max. switching voltage		250V AC, 110V DC
Max. inrush current		2A 10ms or less
Leakage current (OFF)		0.1mA or lower
Max. voltage drop (ON)		0.9V (TYP) 0.5A, 1.5V (MAX) 0.5A
Output type		Source loading
Response time	OFF → ON	2ms or less
	ON → OFF	2ms or less (resistance load)
External power supply requirement	Voltage	24V DC (21.6 to 26.4V DC)
	Current	10mA (24V DC)
Surge killer		Zener diode
Common terminal arrangement		16 points/common (2 terminals)

Number of occupied stations		4
I/O unit power supply (+24V, 24G terminal)	Voltage	15.6 to 31.2V DC
	Current	82mA or lower (at 24V, TYP)
Weight		0.65kg (1.43lb)

Terminal No.	Signal No.
TB1	RDA
TB2	SG
TB3	RDB
TB4	SLD
TB5	+24V
TB6	FG
TB7	24G
TB8	X0
TB9	X1
TB10	X2
TB11	X3
TB12	X4
TB13	X5
TB14	X6
TB15	X7
TB16	COM1
TB17	X8
TB18	X9
TB19	XA
TB20	XB
TB21	XC
TB22	XD
TB23	XE
TB24	XF
TB25	COM2

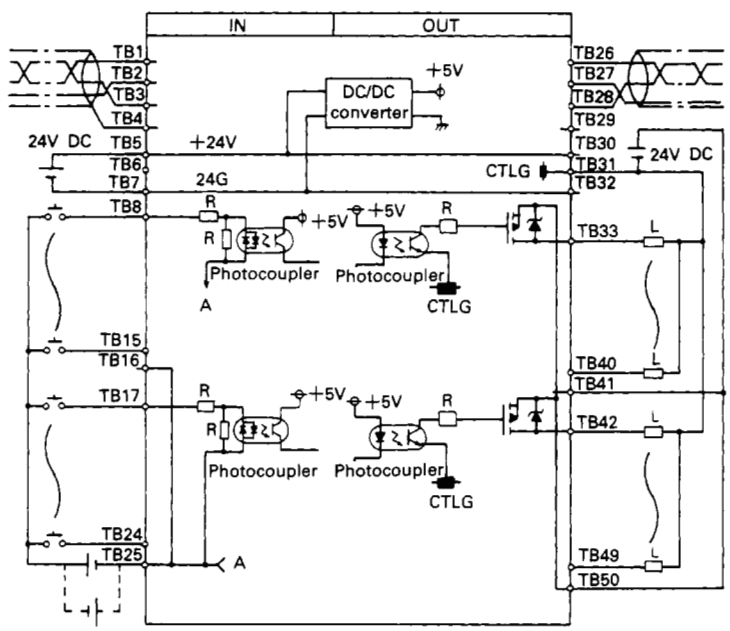

Terminal No.	Signal No.
TB26	SDA
TB27	SG
TB28	SDB
TB29	NC
TB30	+24V
TB31	CTLG
TB32	24G
TB33	Y10
TB34	Y11
TB35	Y12
TB36	Y13
TB37	Y14
TB38	Y15
TB39	Y16
TB40	Y17
TB41	COM3
TB42	Y18
TB43	Y19
TB44	Y1A
TB45	Y1B
TB46	Y1C
TB47	Y1D
TB48	Y1E
TB49	Y1F
TB50	COM4

3.5 Power Supply Unit (A66PC)

Item		Specification
Input voltage		100-120V AC/200-240V AC (85 to 132V AC/170 to 264V AC) −15 to +10%E
Input frequency		50/60Hz ±3Hz
Max. input apparent power		110VA or lower
Inrush current		20Ap/20Ap or lower
*1 Rated output current	24V DC ±5%	0 to 0.6A
*2 Overcurrent protection	24V DC	1.25A ±20% (inverted L type suspension characteristic)
*3 Overvoltage protection	24V DC	35V DC ±10%
Efficiency		65% or higher
Power indicator		Power LED display
Terminal screw size		M3.5 × 7
Applicable wire size		0.3 to 2mm^2
Applicable solderless terminal		V1.25-3, V1.25-YS3A V2-S3, V2-YS3A
Applicable tightening torque		8.5 (7.36) to 11.5kg·cm (9.96lb·inch)
External dimensions mm (inch)		170 (6.70) × 64 (2.52) × 80 (3.15)
Weight kg (lb)		0.66 (1.45)
Allowable momentary power failure		20ms max.

POINT

***1: Rated output current varies with ambient temperature as shown below.**

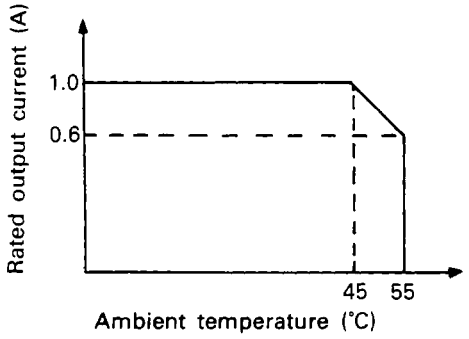

***2: Overcurrent protection**
The overcurrent protection device shuts off the 24V DC circuit and stops the system if the current flowing in the circuit exceeds the specified value. When this device is activated, the power supply unit LED is switched off. In this case, remove any cause of overcurrent and start up the system.

***3: Overvoltage protection**
The overvoltage protection device shuts off the 24V DC circuit and stops the system if 31.5 to 38.5V is applied to the circuit. When this device is activated, the power supply unit LED is switched off. In this case, switch off, then on the input power to restart the system. The power supply unit must be changed if the system is not booted and the LED remains off.

If voltage setting on the unit does not conform with the supplied voltage, problems will occur as described below.

	Power Supply Voltage	
	100V AC	200V AC
Set at 100V AC (terminals of ② are shorted)	—	The power supply unit will be broken. (no problem on CPU)
Set at 200V AC (terminals of ② are open)	No problem on the unit. The I/O unit does not work.	—

3.6 DIN Rail Adapter (A6DIN1C)

Item	Specification
Applicable unit	A2CI/O unit, power supply unit
External dimensions mm (inch)	174 (6.85) × 68 (2.68) × 10 (0.39)
Weight kg (lb)	0.06 (0.13)
Applicable DIN rail type (*JIS C2812)	TH35-7.5Fe TH35-7.5Al TH35-15Fe

*JIS : Japanese Industrial Standard

3.7 Common Terminal Block (A2CCOM-TB)

Item	Specifications
Applicable unit	A2C I/O unit
External dimensions mm (inch)	125 (4.92) × 54 (2.13) × 13 (0.51)
Weight kg (lb)	0.12 (0.26)

[Example of using an A2CCOM-TB]

① Example when installed to the input unit AX11C:

② Example when installed to the output unit AY13C:

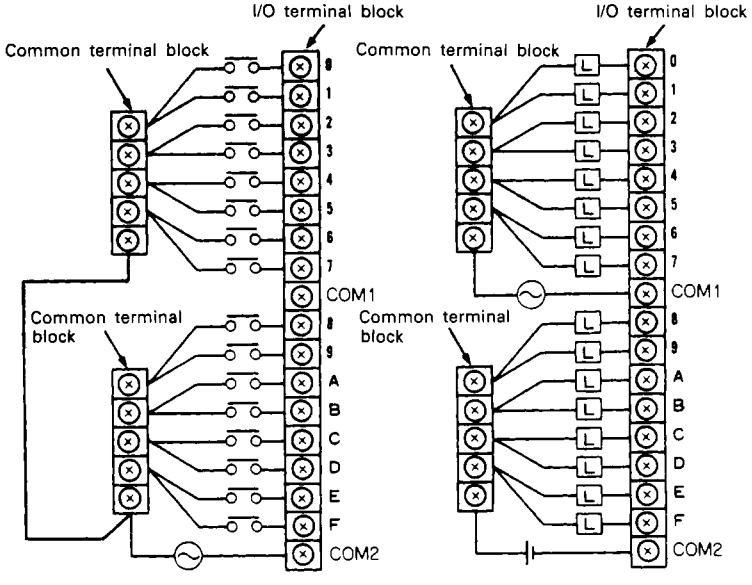

3.8 Remote Terminal Block I/O Units and Remote Connector I/O Units

3.8.1 AJ35TB1-16D input unit

Specifications \ Type		DC input unit (sink/source common type)	
		AJ35TB1-16D	Appearance
Number of input points		16 points	
Insulation system		Photocoupler	
Rated input voltage		24 VDC	
Rated input current		Approx. 7 mA	
Operating voltage range		19.2 to 26.4 VDC (ripple: less than 5%)	
Max. simultaneous input points		70% simultaneously ON (with 26.4 VDC supply)	
ON voltage/ON current		14 VDC or higher/3.5 mA or higher	
OFF voltage/OFF current		6 VDC or less/1.7 mA or less	
Input resistance		Approx. 3.3 KΩ	
Response time	OFF → ON	10 msec. or less	
	ON → OFF	10 msec. or less	
Common		16 points/common (2 common terminals)	
Operation information		"ON" indication (LEDs)	
External wiring system		26-point terminal block (M3 × 7 screws)	
Applicable wire size		0.75 to 2mm²	
Applicable solderless terminals		1.25—3 1.25—YS3A 2—S3 2—YS3A V1.25—3 V1.25—YS3A V2—S3 V2—YS3A	
Accessories		None	
Number of occupied stations		2	
I/O unit power supply	Voltage	15.6 to 31.2 VDC (peak voltage: 31.2 VDC)	
	Current	45 mA or less (with 24 VDC supply)	
Weight		0.3kg (0.66lb)	

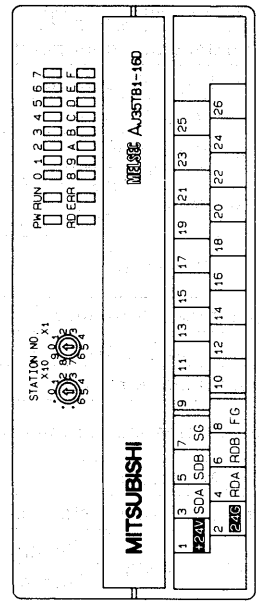

External Connections

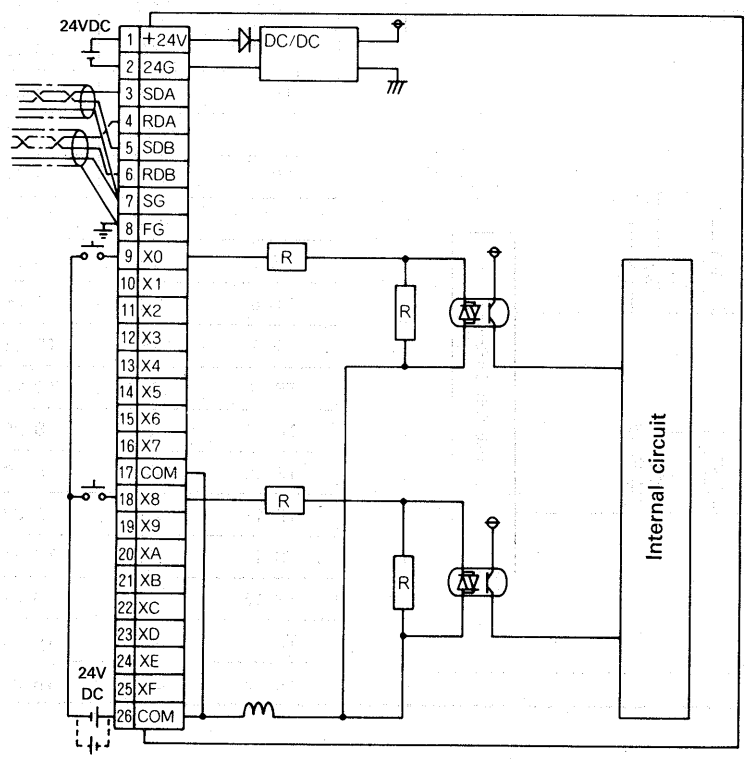

Terminal No.	Signal name
TB 1	+24V
TB 2	24G
TB 3	SDA
TB 4	RDA
TB 5	SDB
TB 6	RDB
TB 7	SG
TB 8	FG
TB 9	X0
TB 10	X1
TB 11	X2
TB 12	X3
TB 13	X4
TB 14	X5
TB 15	X6
TB 16	X7
TB 17	COM
TB 18	X8
TB 19	X9
TB 20	XA
TB 21	XB
TB 22	XC
TB 23	XD
TB 24	XE
TB 25	XF
TB 26	COM

3.8.2 AJ35TB2-16D input unit

Specifications \ Type		DC input unit (sink/source common type)	
		AJ35TB2-16D	Appearance
Number of input points		16 points	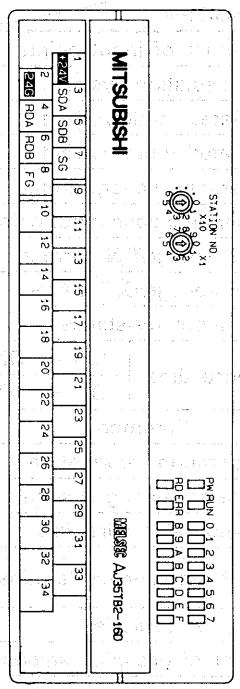
Insulation system		Photocoupler	
Rated input voltage		24 VDC	
Rated input current		Approx. 7 mA	
Operating voltage range		19.2 to 26.4 VDC (ripple: less than 5%)	
Max. simultaneous input points		100% simultaneously ON (with 26.4 VDC supply)	
ON voltage/ON current		14 VDC or higher/3.5 mA or higher	
OFF voltage/OFF current		6 VDC or less/1.7 mA or less	
Input resistance		Approx. 3.3 KΩ	
Response time	OFF → ON	10 msec. or less	
	ON → OFF	10 msec. or less	
Common		16 points/common (2-wire terminal block, 8 common terminals)	
Operation information		"ON" indication (LEDs)	
External wiring system		34-point terminal block (M3 × 7 screws)	
Applicable wire size		0.75 to 2mm²	
Applicable solderless terminals		1.25—3 1.25—YS3A 2—S3 2—YS3A V1.25—3 V1.25—YS3A V2—S3 V2—YS3A	
Accessories		None	
Number of occupied stations		2	
I/O unit power supply	Voltage	15.6 to 31.2 VDC (peak voltage: 31.2 VDC)	
	Current	45 mA or less (with 24 VDC supply)	
Weight		0.35kg (0.77lb)	

External Connections

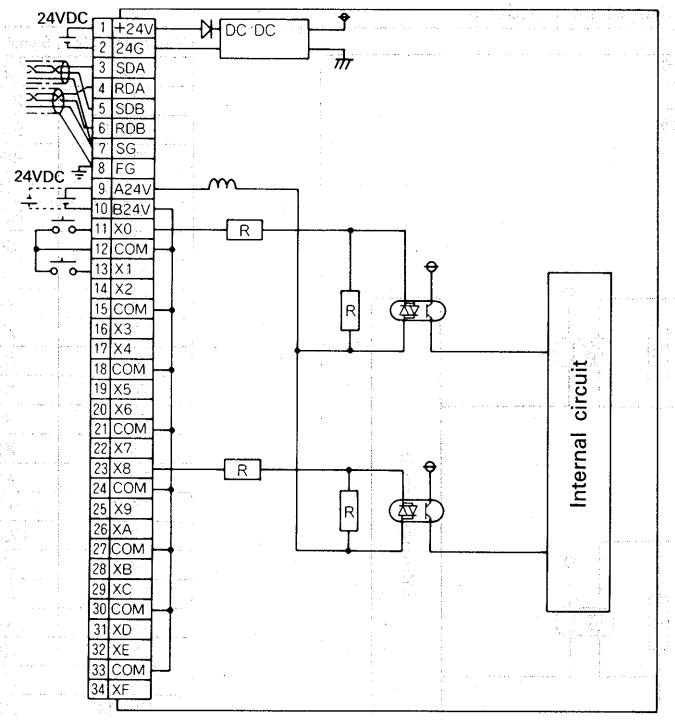

Terminal No.	Signal name	Terminal No.	Signal name
TB 1	+24V	TB 18	COM
TB 2	24G	TB 19	X5
TB 3	SDA	TB 20	X6
TB 4	RDA	TB 21	COM
TB 5	SDB	TB 22	X7
TB 6	RDB	TB 23	X8
TB 7	SG	TB 24	COM
TB 8	FG	TB 25	X9
TB 9	A24V	TB 26	XA
TB 10	B24V	TB 27	COM
TB 11	X0	TB 28	XB
TB 12	COM	TB 29	XC
TB 13	X1	TB 30	COM
TB 14	X2	TB 31	XD
TB 15	COM	TB 32	XE
TB 16	X3	TB 33	COM
TB 17	X4	TB 34	XF

3.8.3 AJ35TC1-32D input unit

Specifications \ Type		DC input unit (sink/source common type)	
		AJ35TC1-32D	Appearance
Number of input points		32 points	
Insulation system		Photocoupler	
Rated input voltage		24 VDC	
Rated input current		Approx. 5 mA	
Operating voltage range		19.2 to 26.4 VDC (ripple: less than 5%)	
Max. simultaneous input points		85% simultaneously ON (with 26.4 VDC supply)	
ON voltage/ON current		17.5 VDC or higher/3.5 mA or higher	
OFF voltage/OFF current		6 VDC or less/1.7 mA or less	
Input resistance		Approx. 4.7 KΩ	
Response time	OFF → ON	10 msec. or less	
	ON → OFF	10 msec. or less	
Common		32 points/common	
Operation information		"ON" indication (LEDs)	
External wiring system		40-pin connector / 8-point terminal block	
Applicable wire size		0.3mm² / 0.75 to 2mm²	
Applicable solderless terminals (for connections to terminal block)		1.25—3 1.25—YS3A 2—S3 2—YS3A V1.25—3 V1.25—YS3A V2—S3 V2—YS3A	
Accessories		Soldering type connector for external wiring	
Number of occupied stations		4	
I/O unit power supply	Voltage	15.6 to 31.2 VDC (peak voltage: 31.2 VDC)	
	Current	55 mA or less (with 24 VDC supply)	
Weight		0.25kg (0.55lb)	

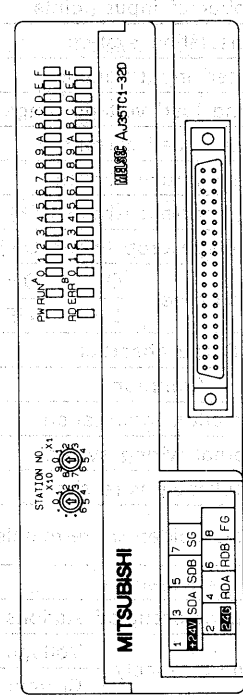

External Connections

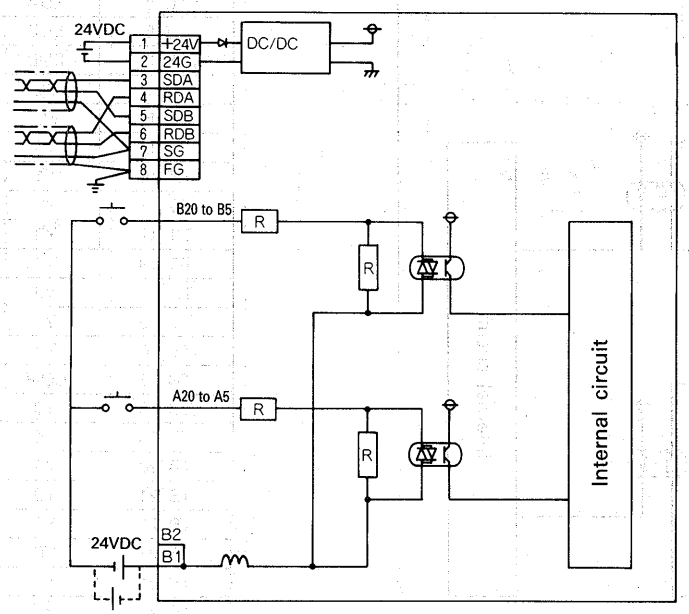

Pin arrangement

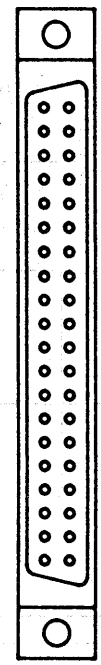

Pin No.	Signal name	Pin No.	Signal name
B20	X00	A20	X10
B19	X01	A19	X11
B18	X02	A18	X13
B17	X03	A17	X13
B16	X04	A16	X14
B15	X05	A15	X15
B14	X06	A14	X16
B13	X07	A13	X17
B12	X08	A12	X18
B11	X09	A11	X19
B10	X0A	A10	X1A
B9	X0B	A9	X1B
B8	X0C	A8	X1C
B7	X0D	A7	X1D
B6	X0E	A6	X1E
B5	X0F	A5	X1F
B4	Vacant	A4	Vacant
B3	Vacant	A3	Vacant
B2	COM	A2	Vacant
B1	COM	A1	Vacant

3.8.4 AJ35TB1-16T transistor output unit

Specifications \ Type		Transistor output unit (sink type)	
		AJ35TB1-16T	Appearance
Number of input points		16 points	
Insulation system		Photocoupler	
Rated input voltage		24 VDC	
Operating load voltage range		19.2 to 26.4 VDC (ripple: less than 5%)	
Max. load current		0.1 A/point, 1.6 A/common	
Max. inrush current		0.4 A, 10 msec. or less	
Leakage current (when OFF)		0.1 mA or less	
Max. voltage drop (when ON)		1.5 VDC or less (at 0.1 A)	
Response time	OFF → ON	2 msec. or less	
	ON → OFF	2 msec. or less (resistance load)	
Surge absorber		Zener diode	
Common		16 points/common (2 common terminals)	
Operation information		"ON" indication (LEDs)	
External wiring system		26-point terminal block connector (M3 × 7 screws)	
Applicable wire size		0.75 to 2mm²	
Applicable solderless terminals		1.25—3 1.25—YS3A 2—S3 2—YS3A V1.25—3 V1.25—YS3A V2—S3 V2—YS3A	
Accessories		None	
Number of occupied stations		2	
I/O unit power supply	Voltage	15.6 to 31.2 VDC (peak voltage: 31.2 VDC)	
	Current	130 mA or less (with 24 VDC supply)	
Weight		0.3kg (0.66lb)	

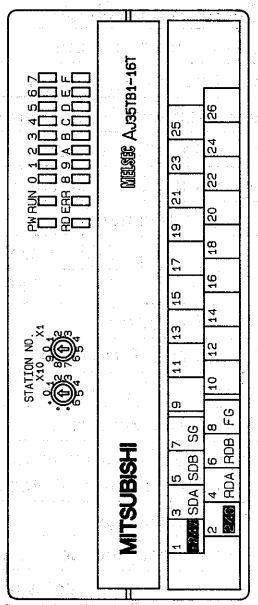

External Connections

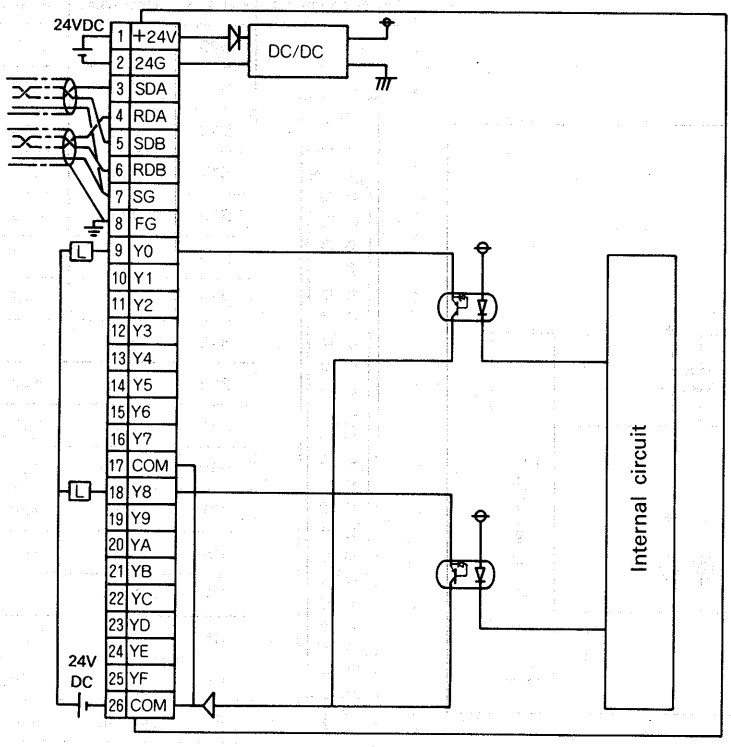

Terminal No.	Signal name
TB 1	+24V
TB 2	24G
TB 3	SDA
TB 4	RDA
TB 5	SDB
TB 6	RDB
TB 7	SG
TB 8	FG
TB 9	Y0
TB 10	Y1
TB 11	Y2
TB 12	Y3
TB 13	Y4
TB 14	Y5
TB 15	Y6
TB 16	Y7
TB 17	COM
TB 18	Y8
TB 19	Y9
TB 20	YA
TB 21	YB
TB 22	YC
TB 23	YD
TB 24	YE
TB 25	YF
TB 26	COM

3.8.5 AJ35TB2-16T transistor output unit

Specifications \ Type		Transistor output unit (sink type)	
		AJ35TB2-16T	Appearance
Number of output points		16 points	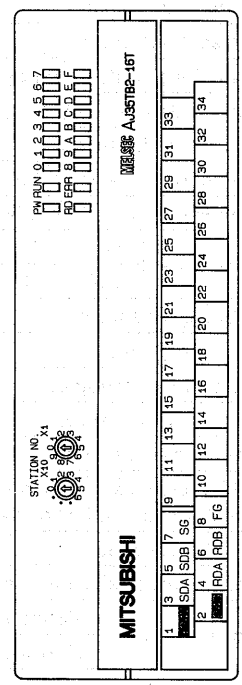
Insulation system		Photocoupler	
Rated load voltage		24 VDC	
Operating load voltage range		19.2 to 26.4 VDC (ripple: less than 5%)	
Max. load current		0.1 A/point, 1.6 A/common	
Max. inrush current		0.4 A, 10 msec. or less	
Leakage current (when OFF)		0.1 mA or less	
Max. voltage drop (when ON)		1.5 VDC or less (at 0.1 A)	
Response time	OFF → ON	2 msec. or less	
	ON → OFF	2 msec. or less (resistance load)	
Surge absorber		Zener diode	
Common		16 points/common (2-wire terminal block, 8 common terminals)	
Operation information		"ON" indication (LEDs)	
External wiring system		34-point terminal block connector (M3 × 7 screws)	
Applicable wire size		0.75 to 2mm²	
Applicable solderless terminals		1.25—3 1.25—YS3A 2—S3 2—YS3A V1.25—3 V1.25—YS3A V2—S3 V2—YS3A	
Accessories		None	
Number of occupied stations		2	
I/O unit power supply	Voltage	15.6 to 31.2 VDC (peak voltage: 31.2 VDC)	
	Current	130 mA or less (with 24 VDC supply)	
Weight		0.35kg (0.77lb)	

External Connections

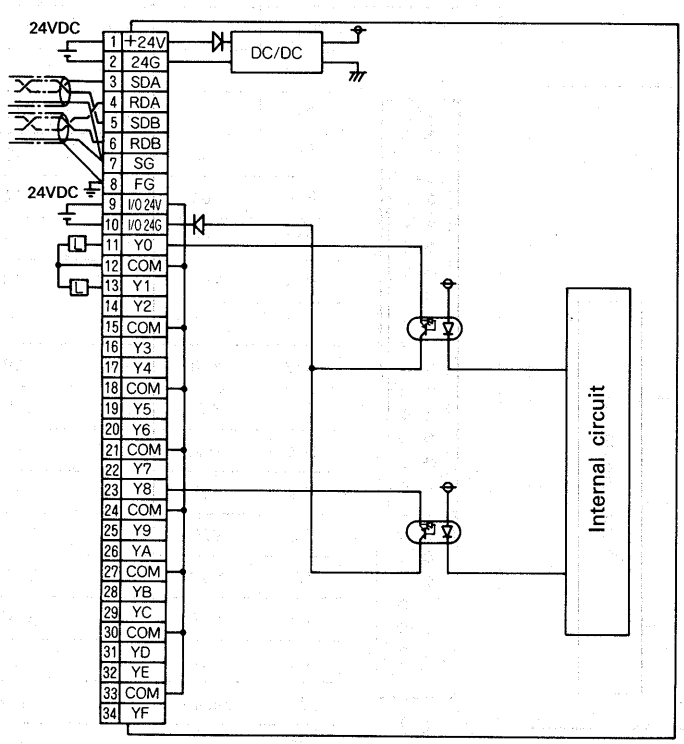

Terminal No.	Signal name	Terminal No.	Signal name
TB 1	+24V	TB 18	COM
TB 2	24G	TB 19	Y5
TB 3	SDA	TB 20	Y6
TB 4	RDA	TB 21	COM
TB 5	SDB	TB 22	Y7
TB 6	RDB	TB 23	Y8
TB 7	SG	TB 24	COM
TB 8	FG	TB 25	Y9
TB 9	I/O 24V	TB 26	YA
TB 10	I/O 24G	TB 27	COM
TB 11	Y0	TB 28	YB
TB 12	COM	TB 29	YC
TB 13	Y1	TB 30	COM
TB 14	Y2	TB 31	YD
TB 15	COM	TB 32	YE
TB 16	Y3	TB 33	COM
TB 17	Y4	TB 34	YF

3.8.6 AJ35TC1-32T transistor output unit

Specifications \ Type		Transistor output unit (sink type)	
		AJ35TC1-32T	Appearance
Number of input points		32 points	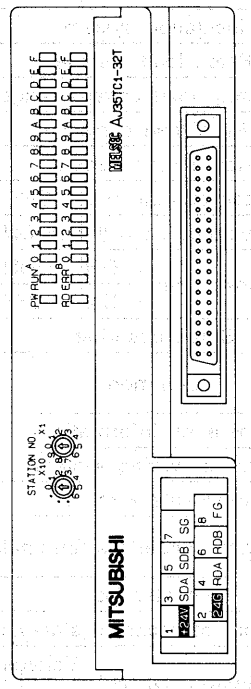
Insulation system		Photocoupler	
Rated load voltage		24 VDC	
Operating load voltage range		19.2 to 26.4 VDC (ripple: less than 5%)	
Max. load current		0.1 A/point, 2 A/common	
Max. inrush current		0.4 A, 10 msec. or less	
Leakage current (when OFF)		0.1 mA or less	
Max. voltage drop (when ON)		1.5 VDC or less (at 0.1 A)	
Response time	OFF → ON	2 msec. or less	
	ON → OFF	2 msec. or less (resistance load)	
Surge absorber		Zener diode	
Common		32 points/common	
Operation information		"ON" indication (LEDs)	
External wiring system		40-pin connector	8-point terminal block
Applicable wire size		0.3mm²	0.75 to 2mm²
Applicable solderless terminals (for connections to terminal block)		1.25—3 1.25—YS3A 2—S3 2—YS3A V1.25—3 V1.25—YS3A V2—S3 V2—YS3A	
Accessories		Soldering type connector for external wiring	
Number of occupied stations		4	
I/O unit power supply	Voltage	15.6 to 31.2 VDC (peak voltage: 31.2 VDC)	
	Current	55 mA or less (with 24 VDC supply)	
Weight		0.25kg (0.55lb)	

External Connections

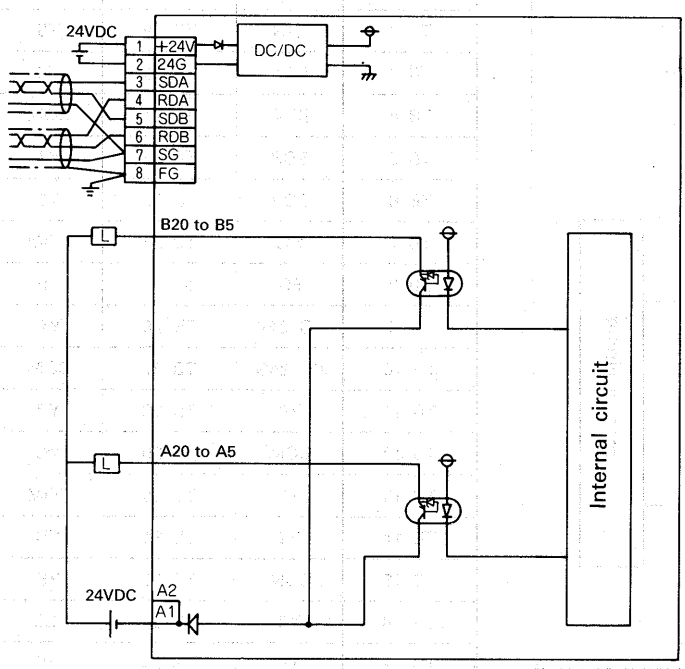

Pin arrangement

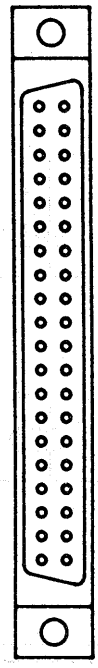

Pin No.	Signal name	Pin No.	Signal name
B20	Y00	A20	Y10
B19	Y01	A19	Y11
B18	Y02	A18	Y12
B17	Y03	A17	Y13
B16	Y04	A16	Y14
B15	Y05	A15	Y15
B14	Y06	A14	Y16
B13	Y07	A13	Y17
B12	Y08	A12	Y18
B11	Y09	A11	Y19
B10	Y0A	A10	Y1A
B9	Y0B	A9	Y1B
B8	Y0C	A8	Y1C
B7	Y0D	A7	Y1D
B6	Y0E	A6	Y1E
B5	Y0F	A5	Y1F
B4	Vacant	A4	Vacant
B3	Vacant	A3	Vacant
B2	Vacant	A2	COM
B1	Vacant	A1	COM

3.8.7 AJ35TC1-32DT input/output composite unit

DC input (sink/source common type) /transistor output composite unit					
AJ35TC1-32DT					Appearance
Input specifications			Output specifications		
Number of input points		16 points	Number of output points		16 points
Insulation system		Photocoupler	Insulation system		Photocoupler
Rated input voltage		24 VDC	Rated load voltage		24 VDC
Rated input current		Approx. 5 mA	Operating load voltage range		19.2 to 26.4 VDC (ripple: less than 5%)
Operating voltage range		19.2 to 26.4 VDC (ripple: less than 5%)	Max. load current		0.1 A/point 1.6 A/common
Max. simultaneous input points		100% simultaneously ON (with 26.4 VDC supply)	Max. inrush current		0.4 A, 10 msec or less
ON voltage/ON current		17.5 VDC or higher/3.5 mA or higher	Leakage current (when OFF)		0.1 mA or less
OFF voltage/OFF current		6 VDC or less/ 1.7 mA or less	Max. voltage drop (when ON)		1.5 VDC or less (0.1 A)
Input resistance		Approx. 4.7KΩ	Response time	OFF → ON	2 ms or less
Response time	OFF → ON	10 ms or less		ON → OFF	2 ms or less (resistance load)
	ON → OFF	10 ms or less	Surge absorber		Zener diode
Common		16 points/common	Common		16 points/common
Operation information		ON display (LEDs)			
External wiring system		40-pin connector	8-point terminal block		
Applicable wire size		0.3mm²	0.75 to 2mm²		
Applicable solderless terminals (for connections to terminal block)		1.25—3 1.25—YS3A 2—S3 2—YS3A V1.25—3 V1.25—YS3A V2—S3 V2—YS3A			
Accessories		Solder type connector for external wiring			
Number of occupied stations		4			
I/O unit power supply	Voltage	15.6 to 31.2 VDC (peak voltage: 31.2 VDC)			
	Current	137 mA or less (with 24 VDC supply)			
Weight		0.25kg (0.55lb)			

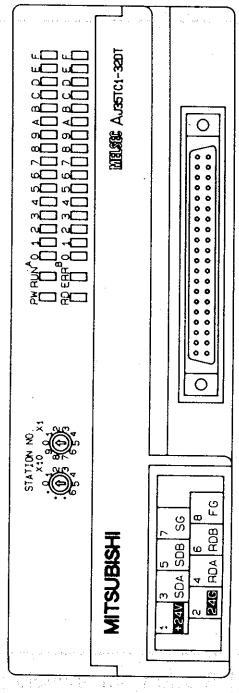

External Connections

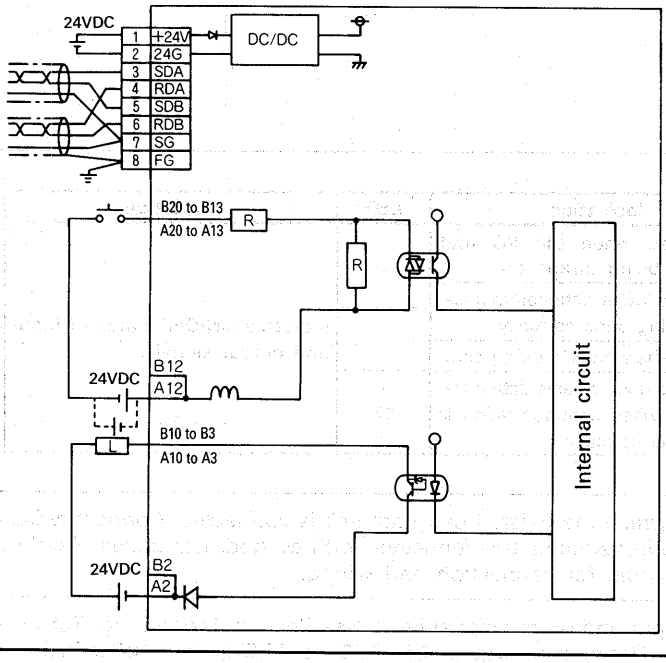

Pin arrangement

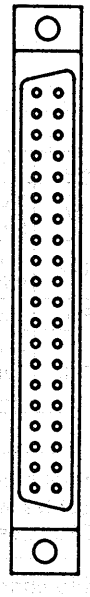

Pin No.	Signal name	Pin No.	Signal name
B20	X00	A20	X10
B19	X01	A19	X8
B18	X02	A18	X9
B17	X03	A17	XA
B16	X04	A16	XB
B15	X05	A15	XC
B14	X06	A14	XE
B13	X07	A13	XF
B12	COM1	A12	COM1
B11	Vacant	A11	Vacant
B10	Y10	A10	Y18
B9	Y11	A9	Y19
B8	Y12	A8	Y1A
B7	Y13	A7	Y1B
B6	Y14	A6	Y1C
B5	Y15	A5	Y1D
B4	Y16	A4	Y1E
B3	Y17	A3	Y1F
B2	COM2	A2	COM2
B1	Vacant	A1	Vacant

4. PART IDENTIFICATION AND INSTALLATION

4.1 Part Identification

This section describes names of parts of the A2CI/O, the power supply unit and the DIN rail adapter.

4.1.1 I/O unit

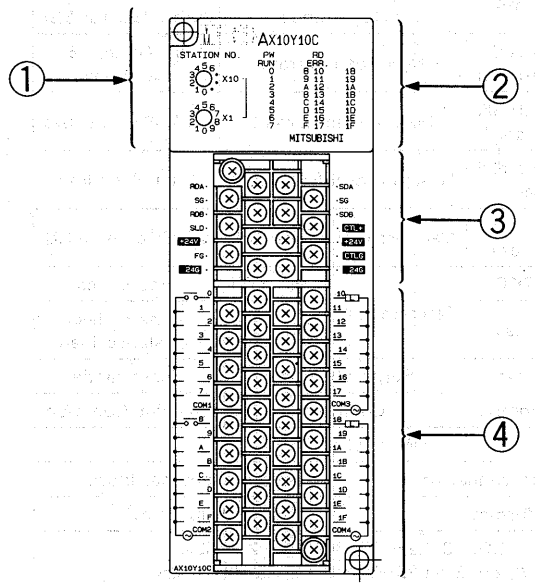

1	Station set switches 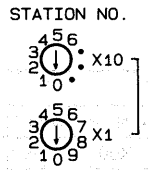 	• Used to set the station number of the A2CI/O between 01 and 64. • "X10" sets the figure of tens of the station number. • "X1" sets a figure between 0 and 9 of the station number.
2	LED indicators PW RUN 0 1 2 3 4 5 6 7 RD ERR. 8 10 9 11 A 12 B 13 C 14 D 15 E 16 F 17 18 19 1A 1B 1C 1D 1E 1F	<table><tr><th>LED</th><th>Indication</th><th>LED</th><th>Indication</th></tr><tr><td>PW</td><td>Illuminates when the I/O unit power is being turned on.</td><td rowspan="2">0</td><td rowspan="4">Indicates ON/OFF status of input and output signals.</td></tr><tr><td rowspan="2">RUN</td><td rowspan="2">Illuminates when data communication is being done correctly.</td></tr><tr><td rowspan="2">ʃ</td></tr><tr><td>RD</td><td>Flickers when data is being sent.</td></tr><tr><td>ERR.</td><td>Illuminates upon receive data error. Turns off when communication is being done correctly.</td><td>1F</td></tr></table>
3	Terminal block for connecting twisted pair cables	Terminal block to which the twisted pair data link is connected. Connect twisted pair cables when other stations are connected with twisted pair cables. Read the A2CCPU User's Manual for connection and wiring.
4	Terminal block for input and output signals	Used to connect input and output signal lines. See Section 3 for wiring. Terminal screws: M3.5 × 7 Tightening torque: 8.5 (7.36) to 11.5kg·cm (9.96lb·inch)

4.1.2 Power supply unit

Part identification of the A66PC power supply unit is given below.

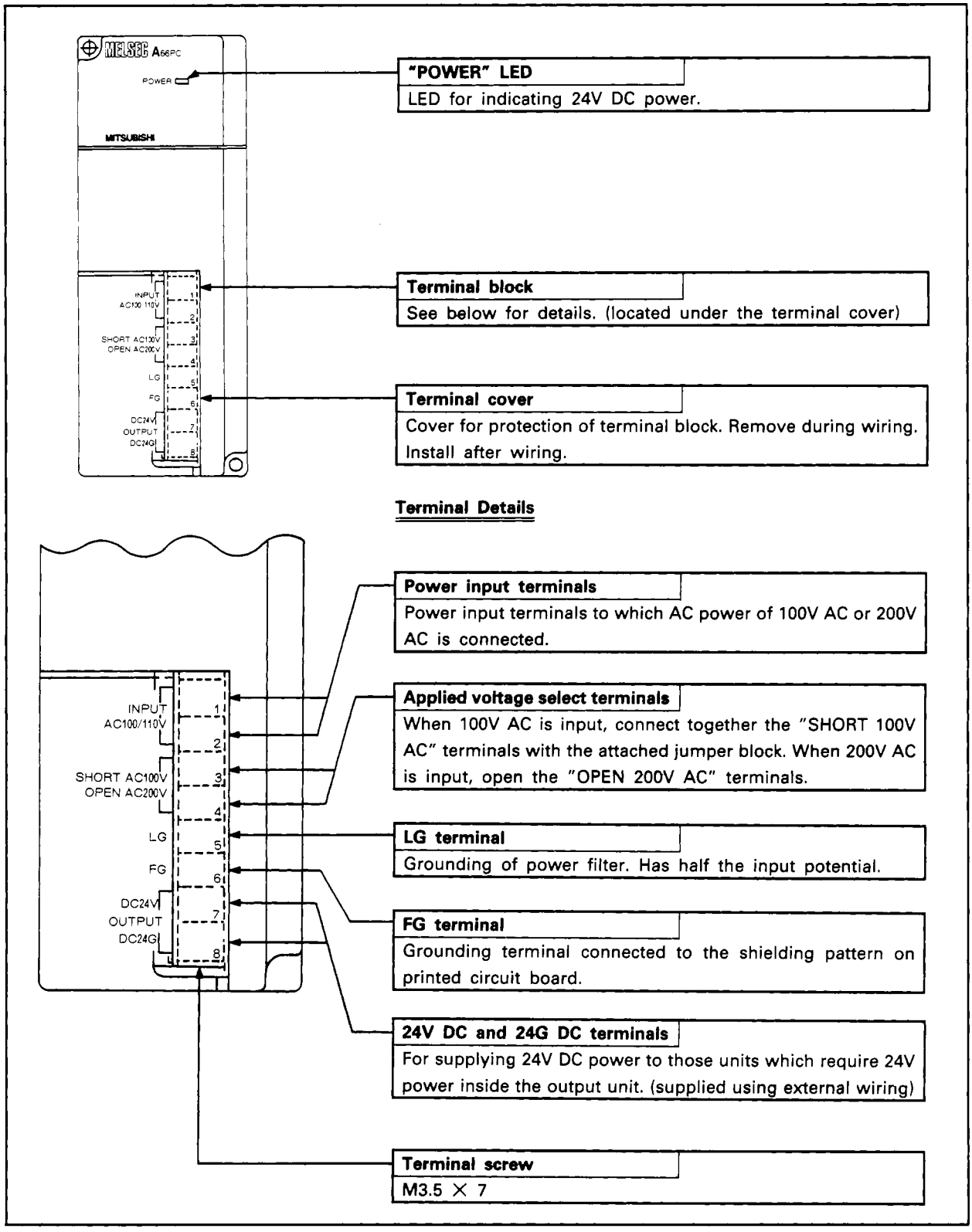

4.1.3 Remote terminal block I/O unit, remote connector I/O unit

The name of the parts of the remote terminal block I/O unit (AJ35TB□-16□) and the remote connector I/O unit (AJ35TC1-32□) are indicated below.

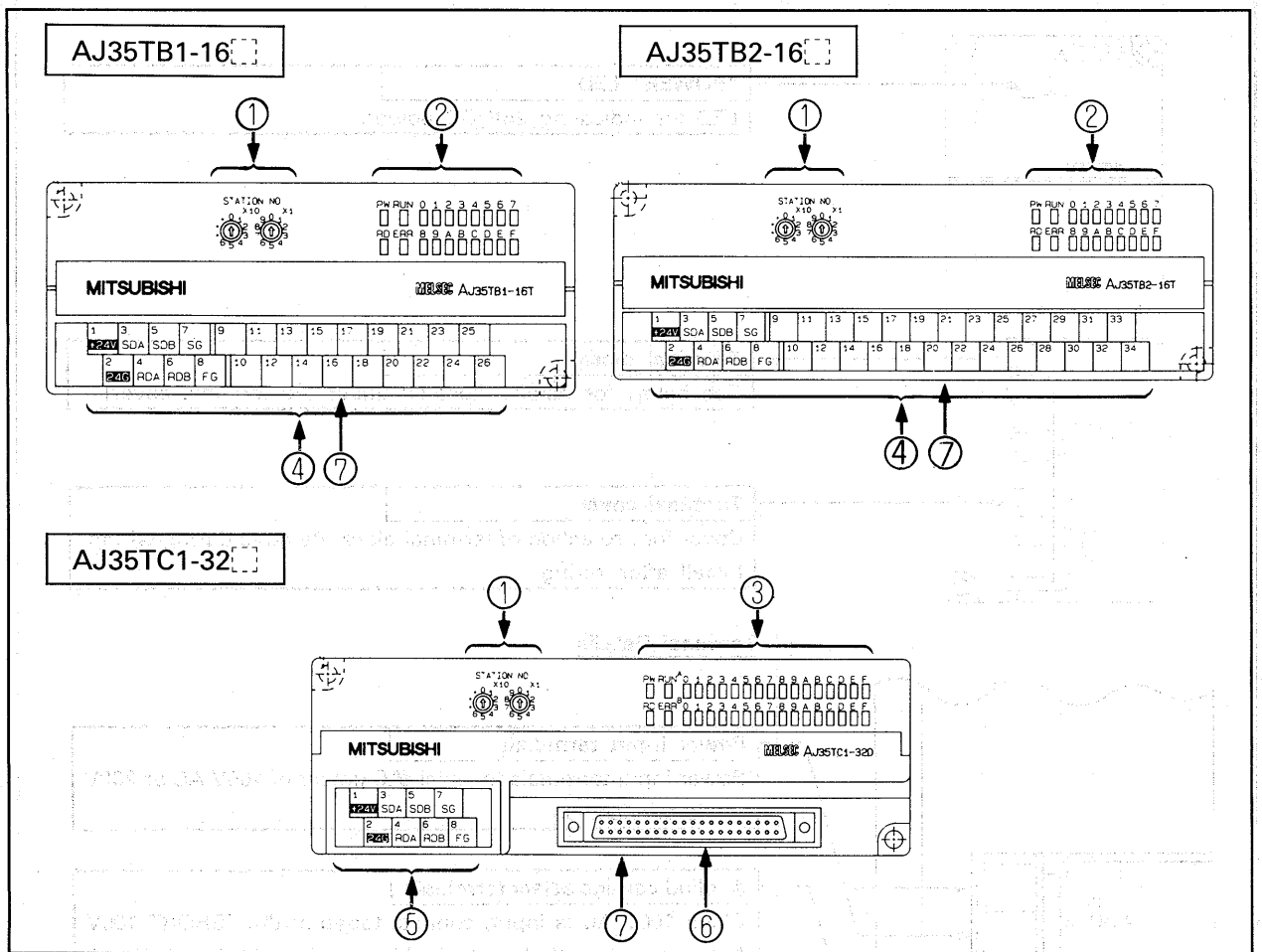

1	Station number setting switches STATION NO. X10 X1	• Used to set the station number of the remote terminal block I/O units and the remote connector I/O units in the range 1 and 64. • The "X10" switch is used to set the ten (10) digit of the station number. • "X1" switch is used to set the units (1) digit of the station number.
2	LED indicators PW RUN 0 1 2 3 4 5 6 7 RD ERR 8 9 A B C D E F	

LED name	Indication	LED name	Indication
PW	Lights when the power to the I/O unit is turned ON.	0	Indicate the ON/OFF status of I/O signals X/Y0 to F.
RUN	Lit while data communication is being performed normally.	to	
RD	Flashes while data communication is in progess.		
ERR.	Lights when a receive data error occurs; off during normal communication.	1F	

<table>
<tr><td>3</td><td>LED indicators</td><td>
<table>
<tr><th>LED name</th><th>Indication</th><th>LED name</th><th>Indication</th></tr>
<tr><td>PW</td><td>Lights when the power to the I/O unit is turned ON.</td><td rowspan="2">A0 to F</td><td rowspan="2">Indication the ON/OFF status of I/O signals X/Y0 to F</td></tr>
<tr><td>RUN</td><td>Lit while data communication is being performed normally.</td></tr>
<tr><td>RD</td><td>Flashes while data communication is in progess.</td><td rowspan="2">B0 to F</td><td rowspan="2">Indicate the ON/OFF status of I/O signals X/Y10 to 1F.</td></tr>
<tr><td>ERR.</td><td>Lights when a receive data error occurs; off during normal communication.</td></tr>
</table>
</td></tr>
<tr><td>4</td><td>Terminal block</td><td>This terminal block serves to connect the I/O unit power supply, the twisted pair data link, and the I/O signals.</td></tr>
<tr><td>5</td><td>Terminal block</td><td>This terminal block serves to connect the I/O unit power supply and the twisted pair data link.</td></tr>
<tr><td>6</td><td>Connector</td><td>This connector is used to connect the I/O signals.</td></tr>
<tr><td>7</td><td>Hook for the DIN rail</td><td>This hook is used to install the DIN rail.</td></tr>
</table>

4.2 Installation

This section gives cautions on installation and procedures of installation of the MINI remote I/O.

4.2.1 Cautions on installation

(1) To provide good ventilation and to make unit replacement easy, allow a clearance of 80mm (3.15inch) or more between the top side of the unit and surrounding structure or parts. (See Fig. 4.1.)

(2) Choose a flat surface for mounting the unit. Waves and warpage of the mounting surface will cause printed circuit boards in the unit to be strained or twisted, which lead to malfunction.

(3) Mount the unit on a separate panel or away from large electromagnetic contactors and no-fuse circuit breakers which produce vibrations.

(4) To avoid influence of radiation of noise or heat, allow a clearance of 100mm (3.94inch) or more if the PC faces such noise or heat radiating devices (when such devices are mounted on the back side of the door). (See Fig. 4.2.)
Also, allow a clearance of 50mm (1.97inch) or more between the side face of the MINI remote I/O and other devices.

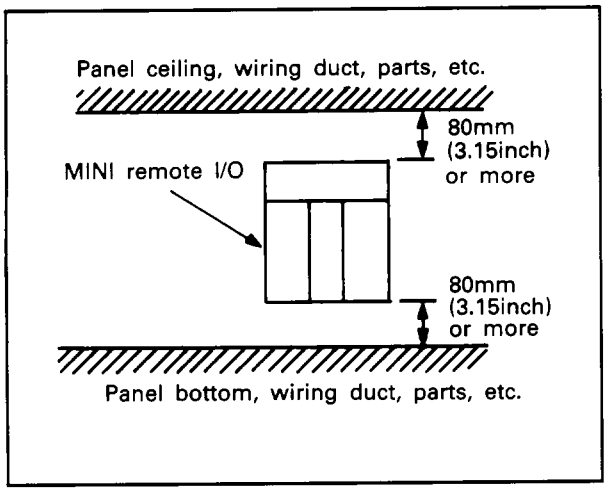

Fig. 4.1 Installing position of unit

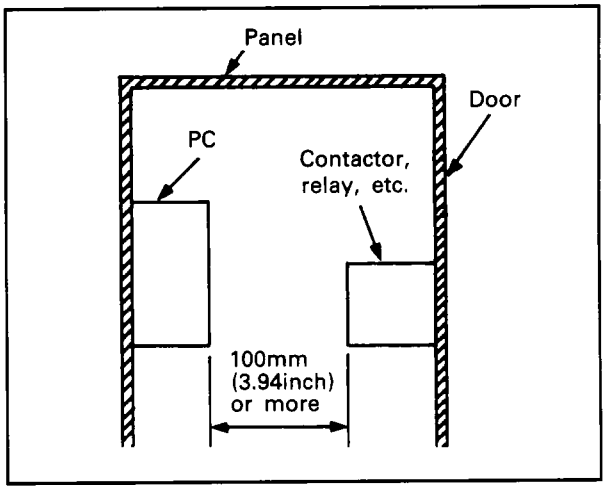

Fig. 4.2 Clearance between PC and other devices

4.2.2 Cautions on handling the DIN rail adapter

(1) Do not drop or give intense shocks to the DIN rail adapter since it is made of plastic.

(2) DIN rail mounting screw intervals
When using a DIN rail adapter, mount a DIN rail according to the following distance.

(a) When mounting a DIN rail TH35-7.5Fe or TH35-7.5Al
When mounting a DIN rail TH35-7.5Fe or TH35-7.5Al, fix the position of mounting screws providing a distance of 200 mm (7.87 inch) or less between each two screws.
Use a distance of 100 mm (3.94 inch) or less to install an A6DIN3C and to arrange modules side by side.

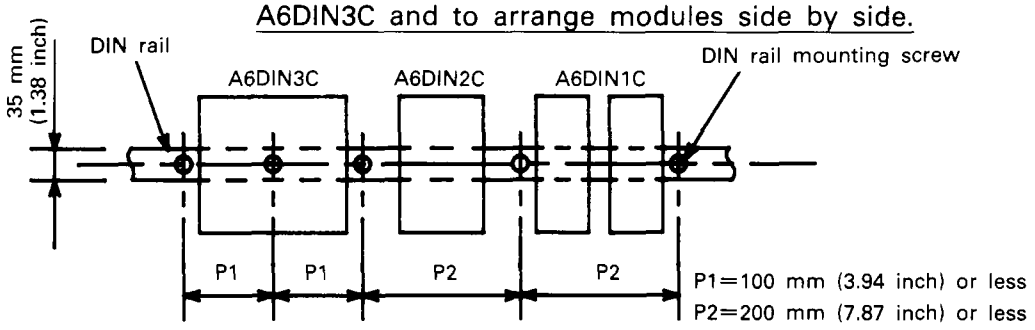

(b) When mounting a DIN rail TH35-15Fe
When mounting a DIN rail TH35-15Fe, fix the position of mounting screws providing a distance of 200 mm (7.87 inch) or less between each two screws.
Also, use the same intervals to install an A6DIN3C and to arrange modules side by side.

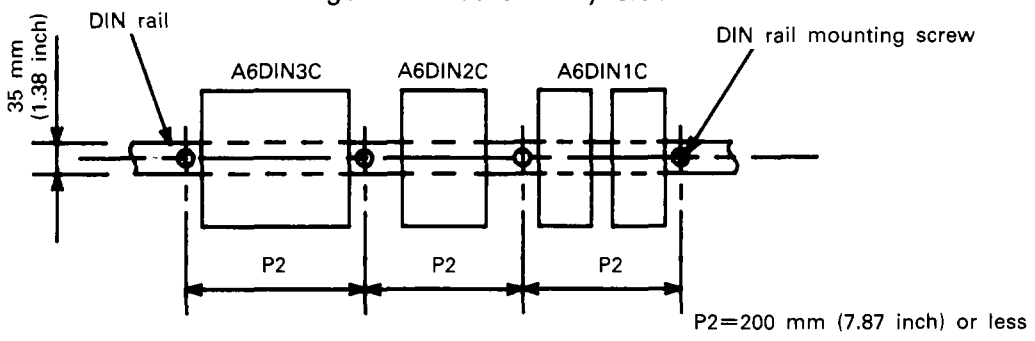

4.2.3 Fixing the unit to the DIN rail adapter

Fix the A2CI/O and the power supply unit (A66PC) to the DIN rail adapter as described below.
Tightening torque should be 8 to 12 kg·cm (6.93 to 10.39 lb/inches).

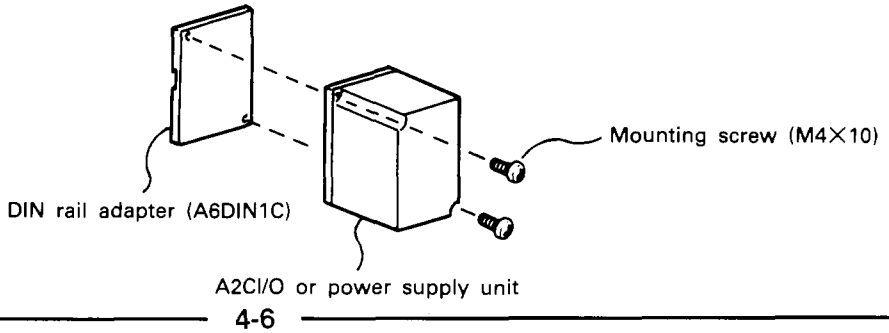

4.2.4 Mounting to the DIN rail

(1) Mounting procedure
After fixing the DIN rail adapter to the unit, mount the unit to the DIN rail as follows.
(a) Engage the hook of the adapter with the rail from above the rail.
(b) Push the unit onto the rail and fix it in position.

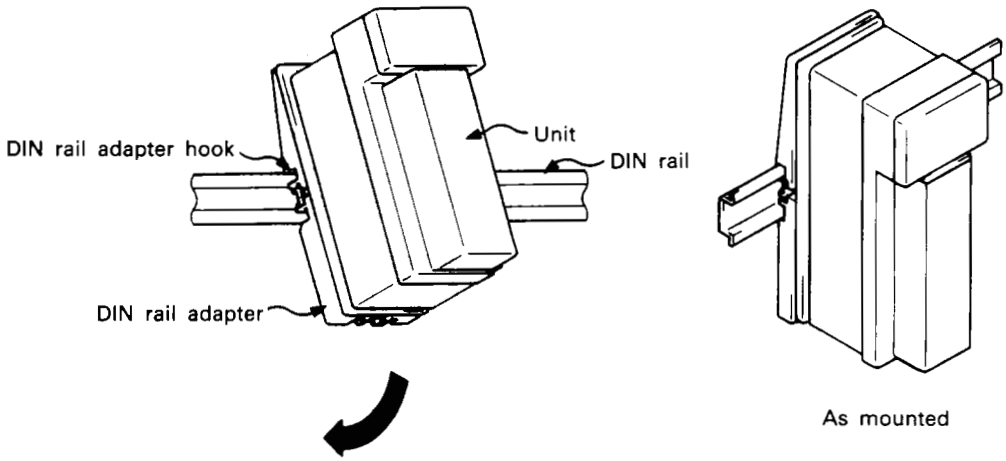

(c) When two adapters with unit are mounted to the rail side by side without leaving a clearance between them, a 4 mm clearance is allowed between the units.
(See Appendix 1, External Dimensions for dimensions of the DIN adapter.)

(2) Removing procedure
Remove the unit from the DIN rail as follows.
(a) Pull down the bottom hook of the adapter using a screwdriver.
(b) Pull the unit away from the rail while pulling down the bottom hook.

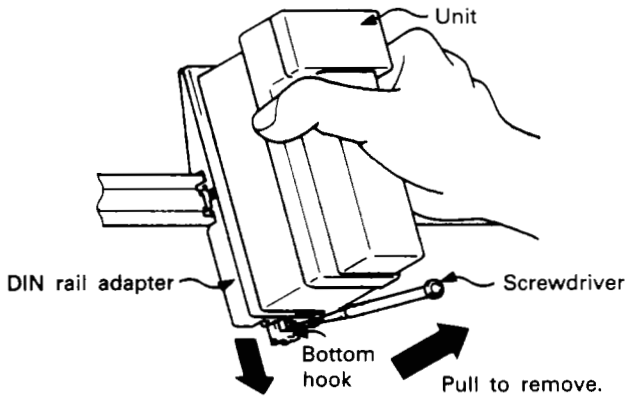

4.2.5 Installing a common terminal block

Install a common terminal block (A2CCOM-TB) between A2C I/O unit terminal block and A2C I/O unit as shown below.
Tightening torque should be 8 to 12 kg·cm (6.93 to 10.39 lb/inches).

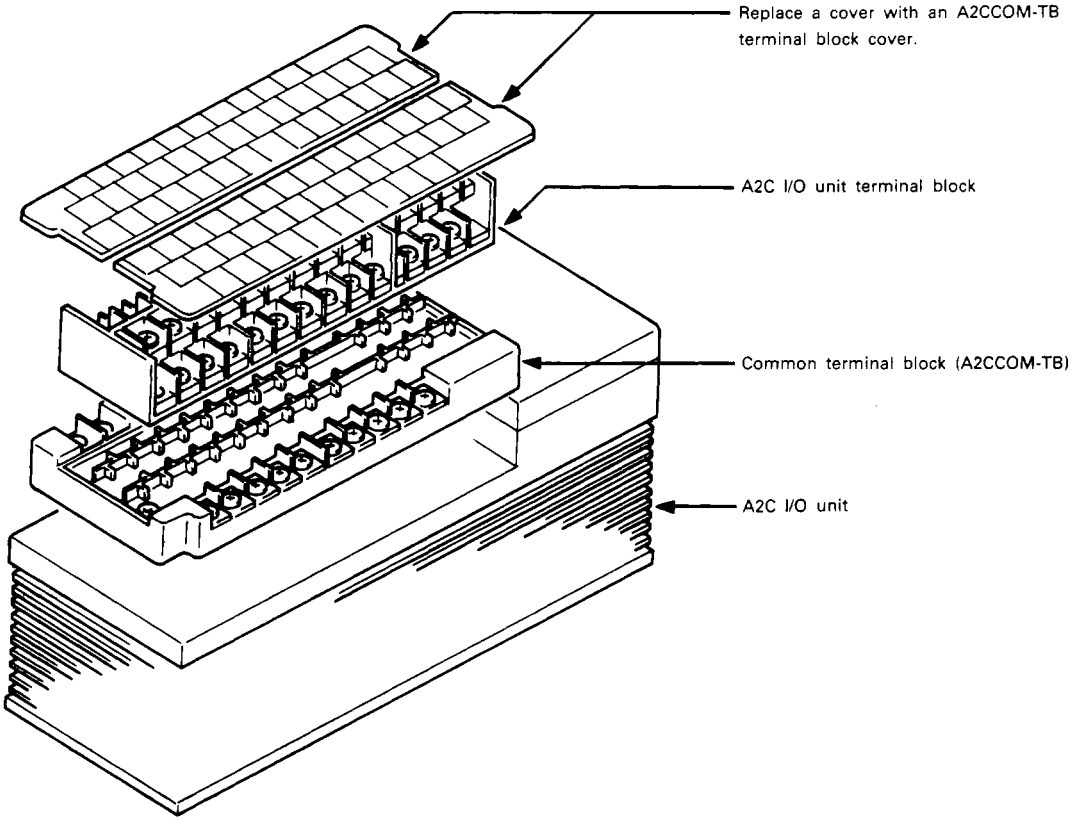

5. TROUBLESHOOTING

5.1 Troubleshooting

This section describes the procedures for solving communication problems when the MINI remote I/O is used. For solving problems concerning the PC CPU module or the MINI-S3 link, read respective User's Manual.

5.1.1 Problem: Input signals from the MINI remote I/O cannot be received or output signals sent to the MINI remote I/O cannot be output.

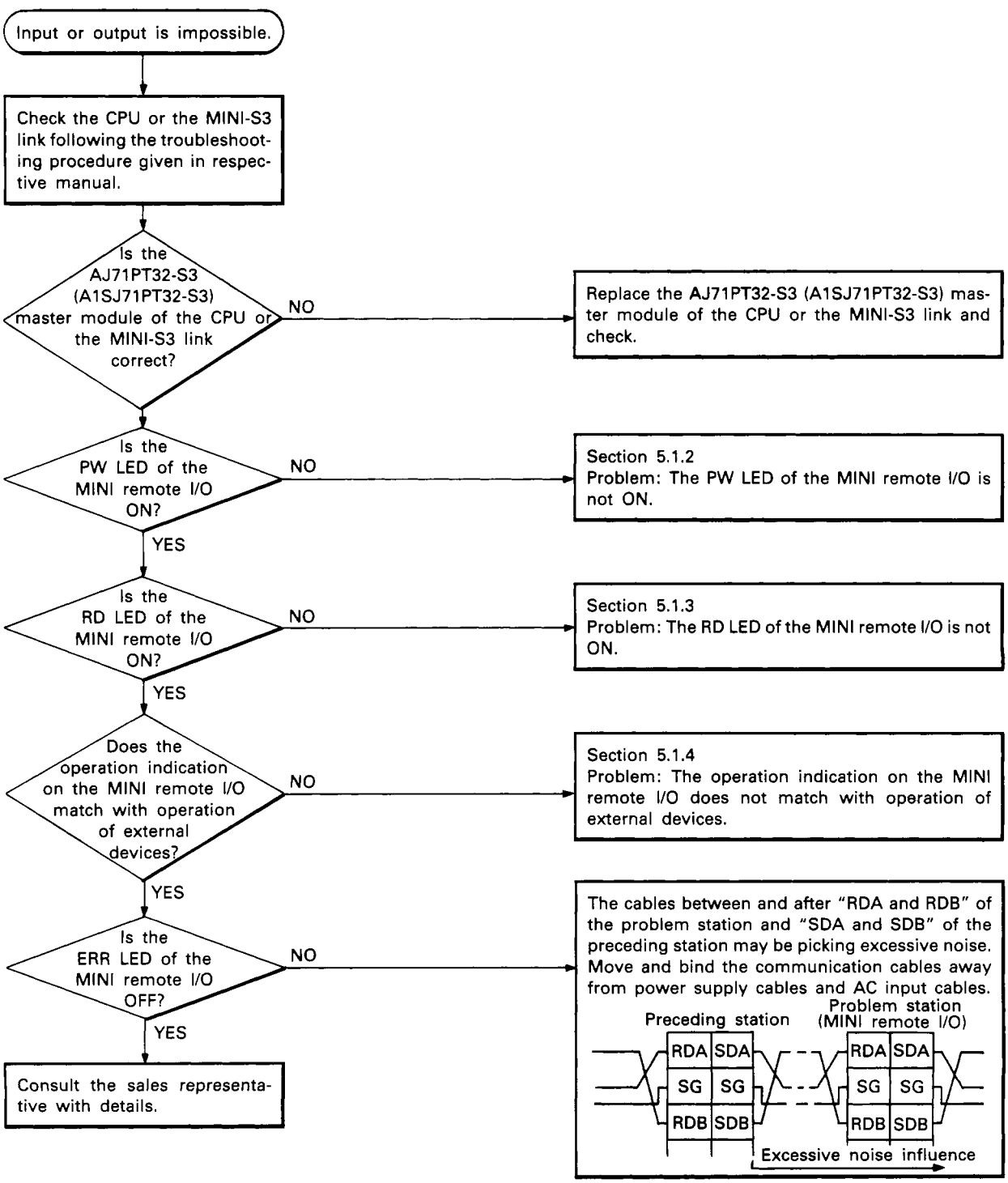

5.1.2 Problem: The PW LED of the MINI remote I/O is not ON.

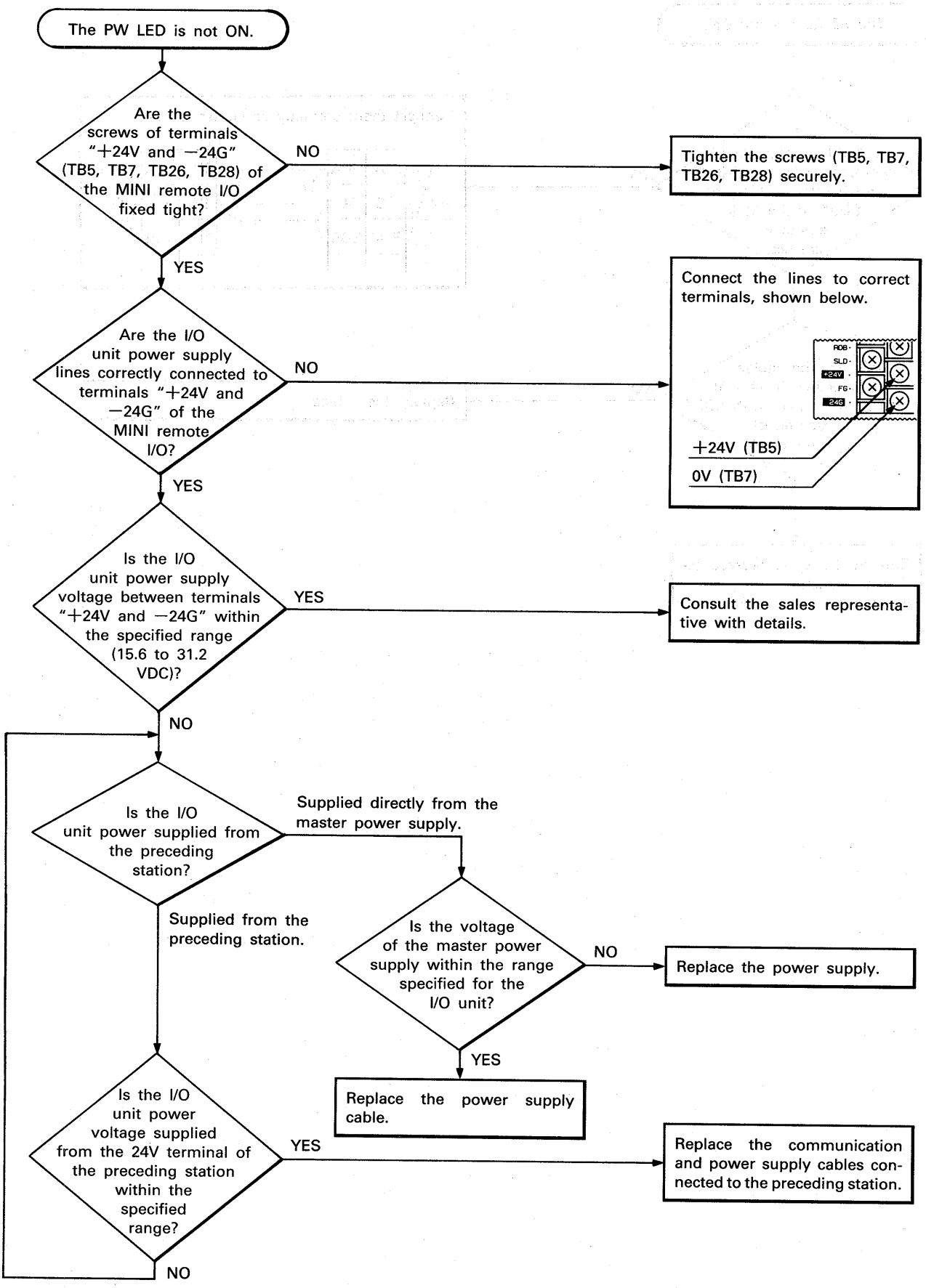

5.1.3 Problem: The RD LED of the MINI remote I/O is not ON.

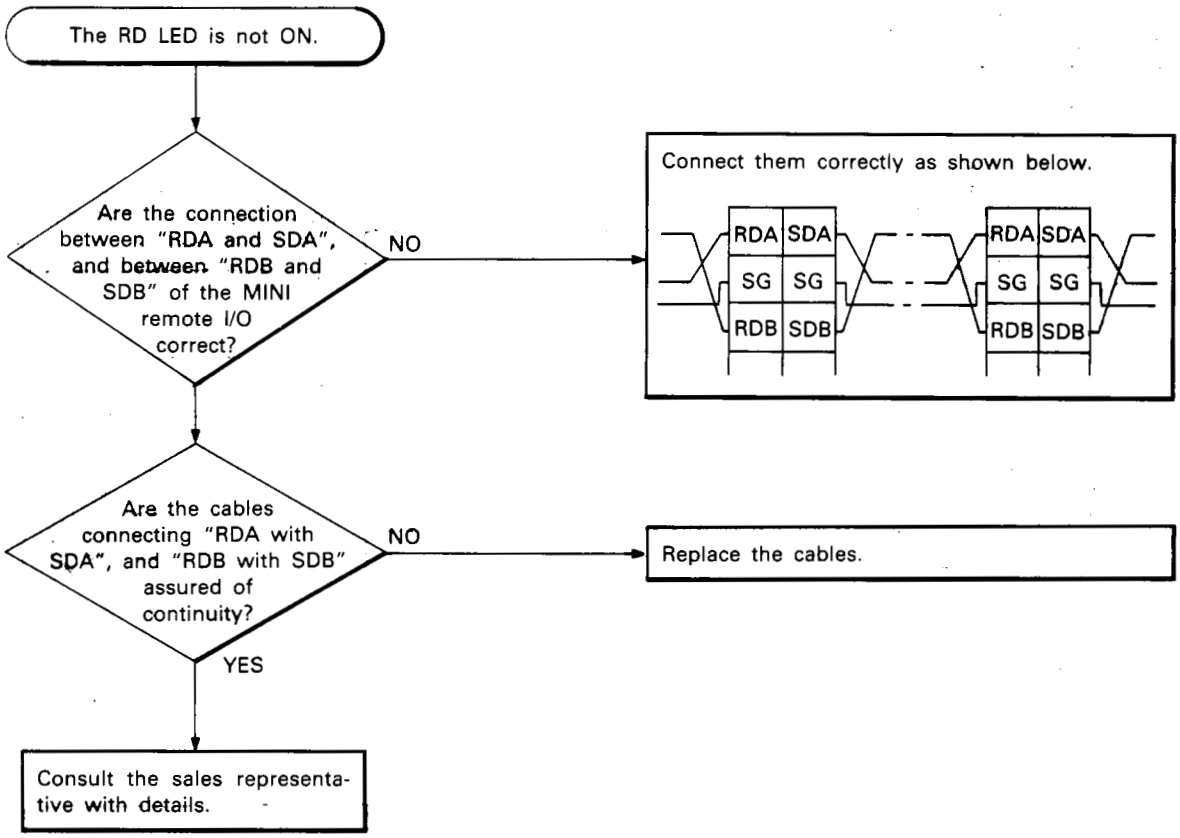

5.1.4 Problem: The operation indication on the MINI remote I/O does not match with operation of external devices.

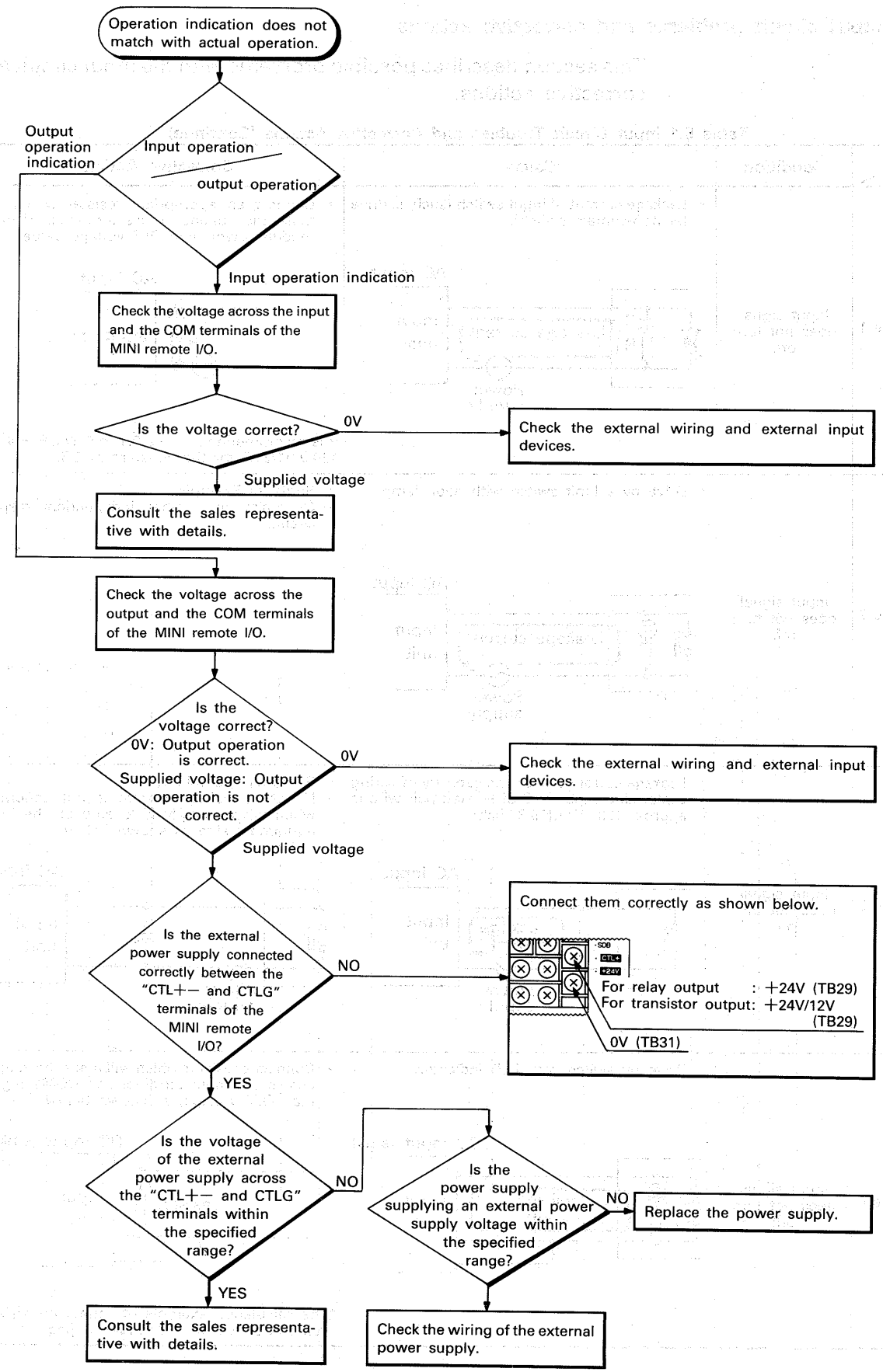

5.2 I/O Connection Troubleshooting

This section explains possible problems with I/O circuits.

5.2.1 Input circuit problems and corrective actions

This section describes possible problems with the input circuit and corrective actions.

Table 5.1 Input Circuit Troubles and Corrective Actions (Continue)

	Condition	Cause	Corrective Action
Example 1	Input signal does not turn off.	• Leakage current of input switch (such as drive by non-contact switch). 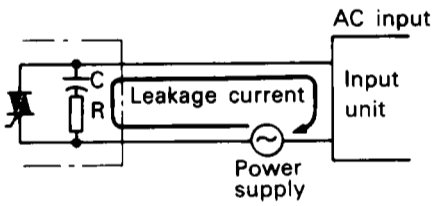	• Connect an appropriate resister which will make the voltage across terminals of input module lower than OFF voltage value. 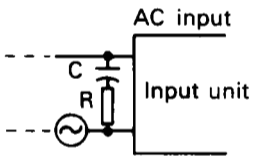 It is recommended to use 0.1 to 0.47 μF + 47 to 120Ω (1/2W) for the constant of CR.
Example 2	Input signal does not turn off.	• Drive by a limit switch with neon lamp. 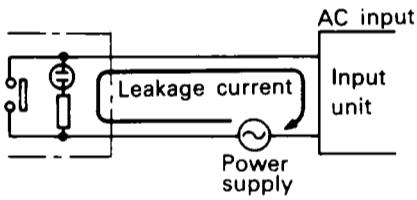	• Same as Example 1. • Or make up another independent display circuit.
Example 3	Input signal does not turn off.	• Leakage current due to line capacity of wiring cable. Line capacity C of twisted pair wire is approx. 100 PF/m(39.37inch). 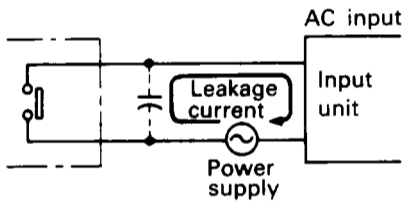	• Same as Example 1. • However, leakage current is not generated when power supply is located on the input equipment side as shown below. 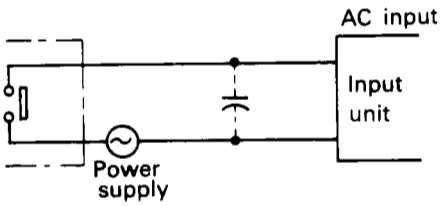
Example 4	Input signal does not turn off.	• Drive by switch with LED indicator. 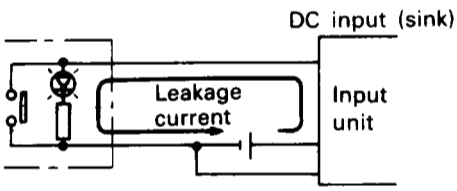	• Connect a resistor which will make the voltage across the input terminal and COM1 higher than OFF voltage, as shown below. 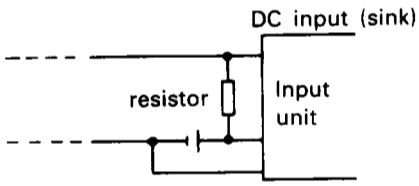 *The calculation example of connected resistor value is shown in the following page.

Table 5.1 Input Circuit Troubles and Corrective Actions

	Condition	Cause	Corrective Action
Example 5	Input signal does not turn off.	• Sneak path due to the use of two power supplies. 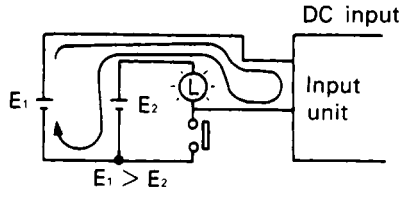	• Use only one power supply. • Connect a sneak path prevention diode. (Figure below) 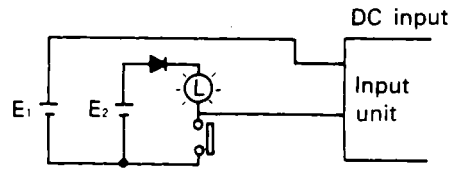

Calculation example for Example 4

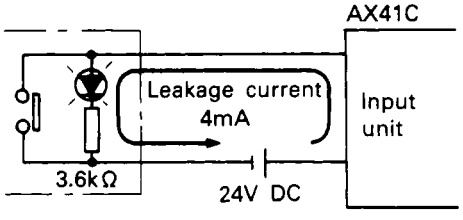

The switch with LED indicator is connected to AX41C and there is 4mA leakage current.

- The voltage V_{TB} across terminal and common is obtained by the following expression:

$$V_{TB} = 4\ [mA] \times 3.3\ [k\Omega] = 13.2\ [V]$$ (Voltage drop in LED is ignored.)

Since the voltage does not satisfy the OFF voltage of 4V or lower, the input signal does not turn OFF. Therefore, connect a resistor as shown below.

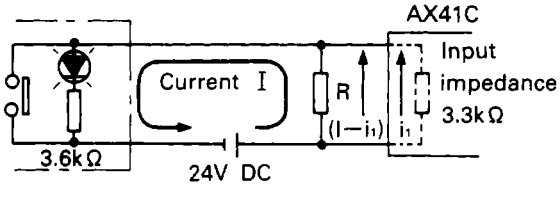

R: Resistor
i_1: Internal current of AX41C
$(I-i_1)$: Current flows to the resistor R

- Calculate the resistor value R as shown below. For an input voltage of 4V or lower, current I must be:

$$(24 - 4\ [V]) \div 3.6\ [k\Omega] = 5.55\cdots[mA] \fallingdotseq 5.56\ [mA]$$

Resistor R must be selected to make current I 5.56mA or higher.

- Hence, for resistor R:
  (Input voltage [V] of AX41C) ÷ R > ($I-i_1$) [mA]
  4 [V] ÷ R > 5.56 − 1.21 [mA]
  4 [V] ÷ 4.35 [mA] > R
  919.5 [Ω] > R

  For R = 0.9 [kΩ] or lower (0.82 [kΩ]), power capacity W must be:

  W = (applied voltage)^2 / R (or W = (maximum current)^2 × R)

  Resistor R terminal voltage is:

  $$\frac{3.3 \times 0.82}{3.3 + 0.82}\ [k\Omega] : \frac{3.3 \times 0.82}{3.3 + 0.82} + 3.6\ [k\Omega] = X : 24\ [V]$$

  X = 3.7 [V]

  Therefore, the power capacity W of resistor R is:

  W = (3.7 [V])^2 / 0.82 [kΩ] = 0.017 [W]

- Use a safety factor of 3 to 5. Resistor should therefore be rated at 0.5 to 1 [W].

  A 0.82 [kΩ], 0.5 to 1 [W] resistor should therefore be connected across the relevant input terminal and its COM.

5.2.2 Output circuit problems and corrective actions

This section describes possible problems with the output circuit and corrective actions.

Table 5.2 Output Circuit Failures and Corrective Actions (Continue)

	Condition	Cause	Corrective Action
Example 1	When output in off, excessive voltage is applied to load.	• Load is half-wave rectified inside (seen in some solenoids). 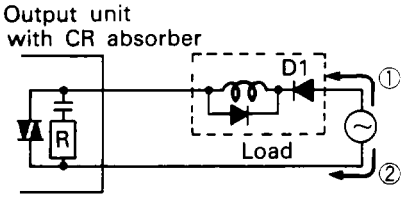 • When the polarity of power supply is as shown by ①, C (or capacitive varistor) is charged. When the polarity is as shown by ②, voltage charged in C (or capacitive varistor) plus line voltage are applied across D1. Max. voltage is approx. 2.2E.	• Connect a resistor of several ten kΩ to several hundred kΩ across the load. It a resistor is used in this way, it dose not pose problem to output element but may sometimes cause the diode, which is built in the load, to deteriorate, resulting in burning etc. 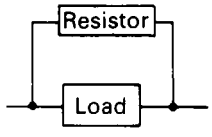
Example 2	Load does not turn off. (Triac output)	• Leakage current due to built-in noise suppression 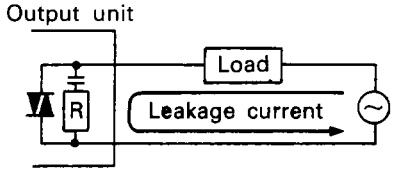 	• Connect C and R across the load. When wiring distance from output card to load is long, there may be a leakage current due to the line capacity. 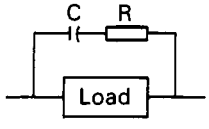 It is recommended to use 0.1 to 0.47 μF + 47 to 120Ω (1/2W) for the constant of CR.
Example 3	Load turns off with a delay.	• Leakage current due to load noise suppressor 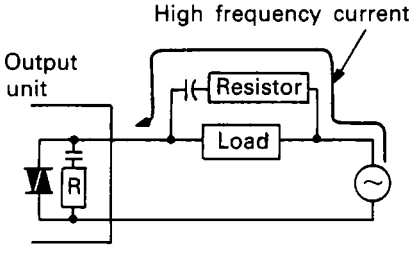 	• 8 Remove noise suppessor from both sides of the load and connect a resistor. When wiring distance from output card to load is long, there may be a leakage current due to the line capacity. 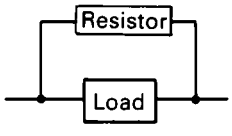 Recommended resistance At 100V AC: 5 to 10 kΩ, 5 to 3W At 200V AC: 10 to 20 kΩ, 15 to 10W
Example 4	When load is CR type timer, time constant fluctuates.	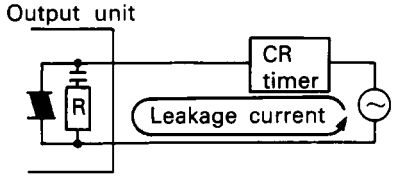 	• Reduce the power supplies from two to one. • Connect a sneak path prevention diode. When the load is a relay or similar device, it is necessary to connect reverse-voltage absorbing diode to the load. (Shown by the dotted line in the figure at left) 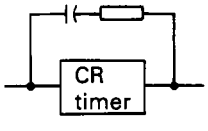 Calculate the CR constant depending on the load.

Table 5.2 Output Circuit Failures and Corrective Actions

	Condition	Cause	Corrective Action
Example 5	Load turns ON only for an instant when output turns OFF.	• Counter electromotive voltage due to ON/OFF operation of external relays. 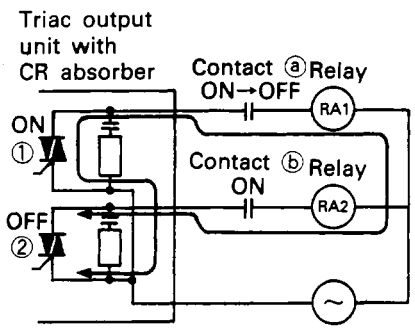 • When output ① is ON and output ② is OFF, and when contact ⓐ is turned from ON to OFF, the counter electromotive voltage produced at external relay RA1 makes output ② turn ON for an instant and external relay RA2 turn ON for an instant.	• Connect a varistor to both ends of the load or triac output. 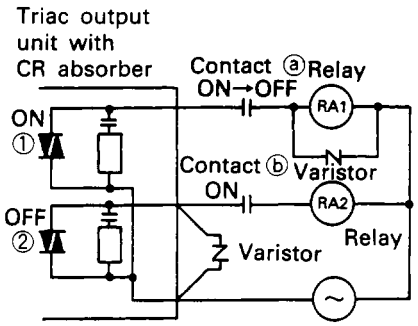 • Varistor of which element diameter is 7mm or more and of 430V is recommended.

POINT

Specifications recommended for the capacitor and resistor used in Examples 2 and 4 are as follows.

1) Combination of capacitors and resistors

C	0.1 μF	0.47 μF	0.5 μF
R	120Ω	47Ω	50Ω

2) Rated voltage of C is 630V DC or 200V AC.

3) Power capacity of R is 1/2W or more.

4) When power consumption of load is 30V A or larger, use C and R of 0.47 μF + 47Ω.

APPENDIX

APPENDIX 1 EXTERNAL DIMENSION DIAGRAM

(1) External dimensions of the AX□C, AY□C and AX□Y□C

64 (2.52)

MELSEC AX11C

STATION NO. X10 X1

PW RUN

RD ERR.

MITSUBISHI

RDA SG RDB SLD +24V FG 24G

SDA SG SDB NC +24V NC 24G

COM1 COM2 COM3 COM4

161 (6.34)

170 (6.69)

M3.5 terminal screw

55 (2.17)

2—φ5 mounting hole
(M4 mounting screw)

80 (3.15)

4 (0.16)

Unit: mm (inch)

APP

(2) External dimensions of the A66PC

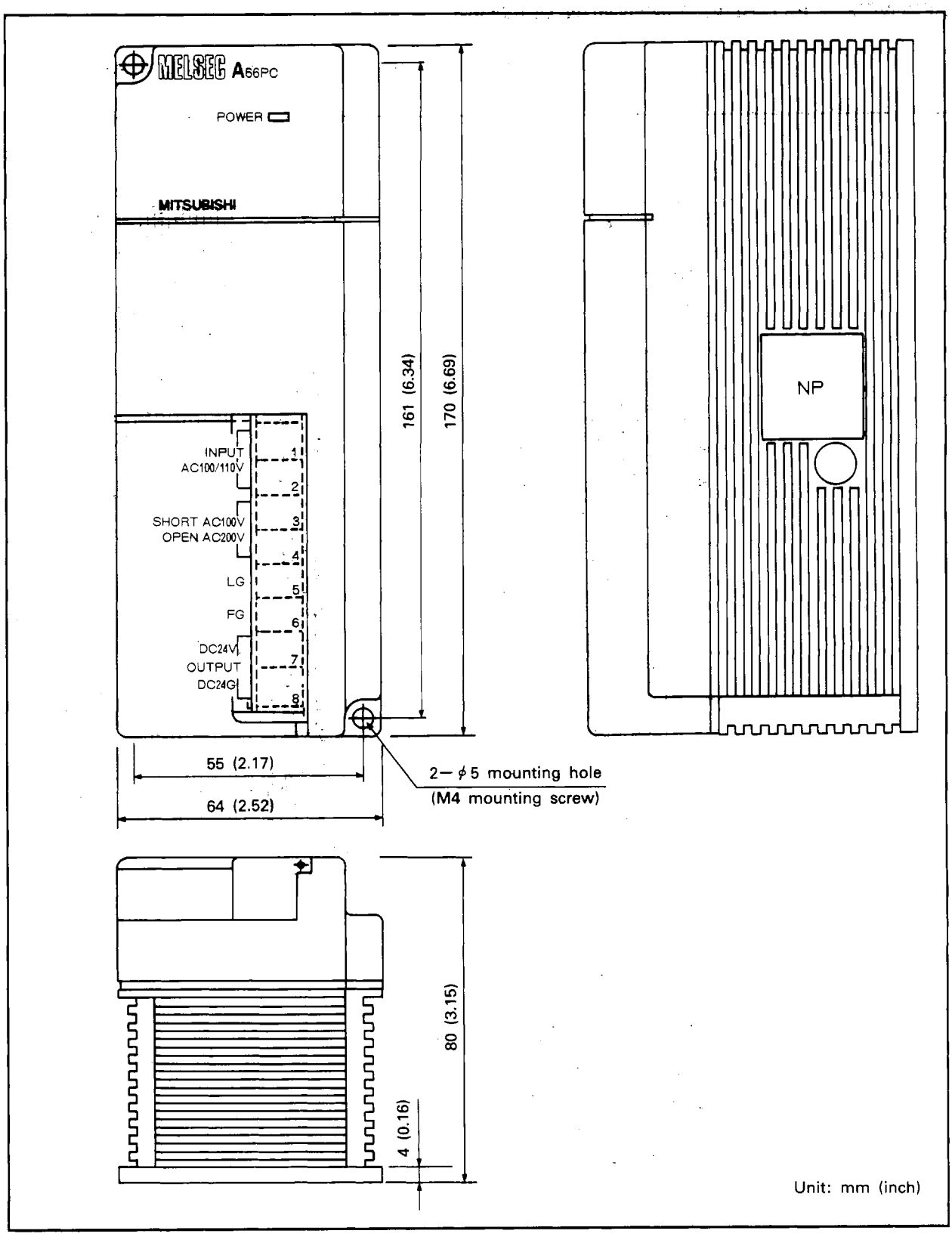

(3) External dimensions of the A6DIN1C

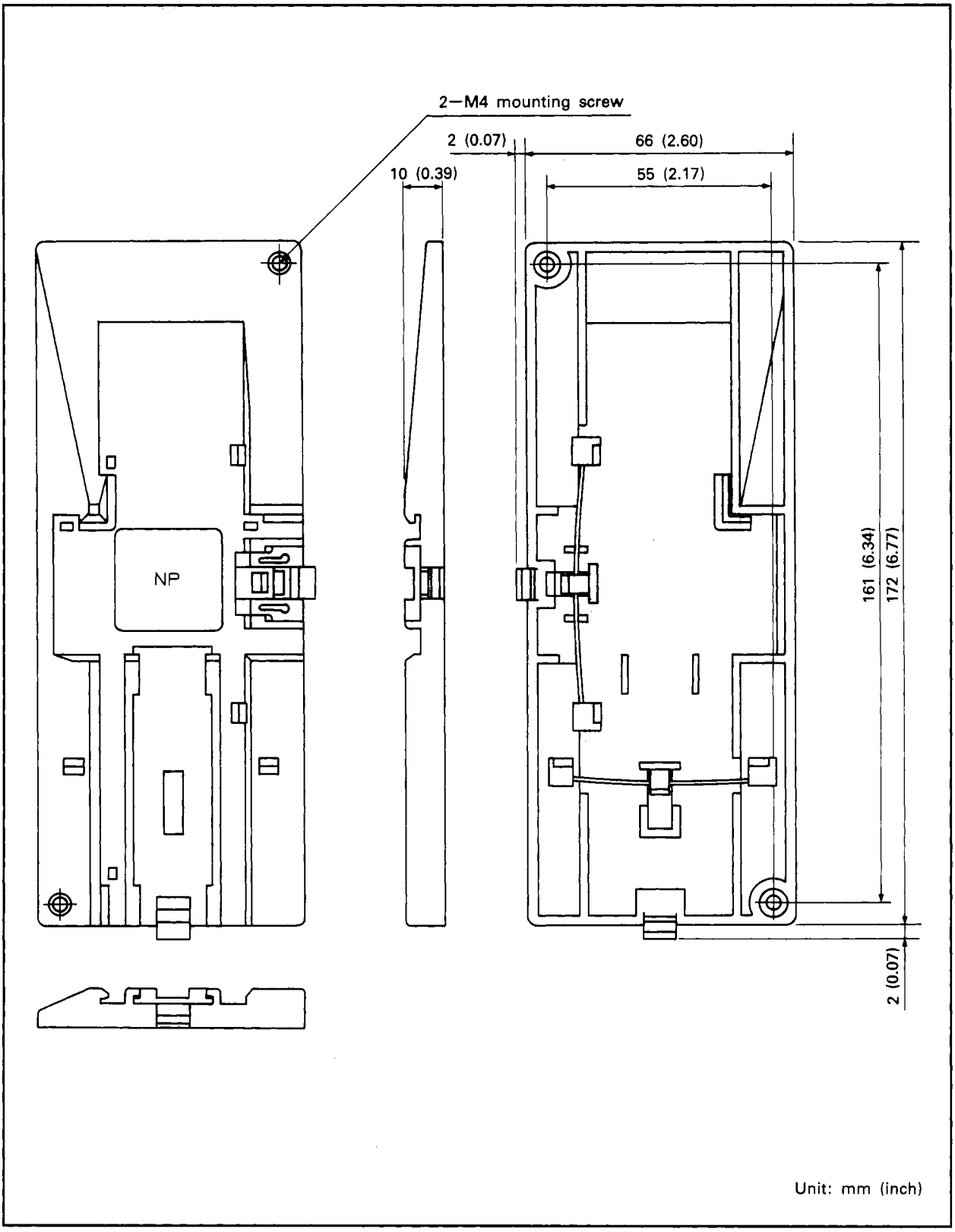

(4) External dimensions of the ACCOM-TB

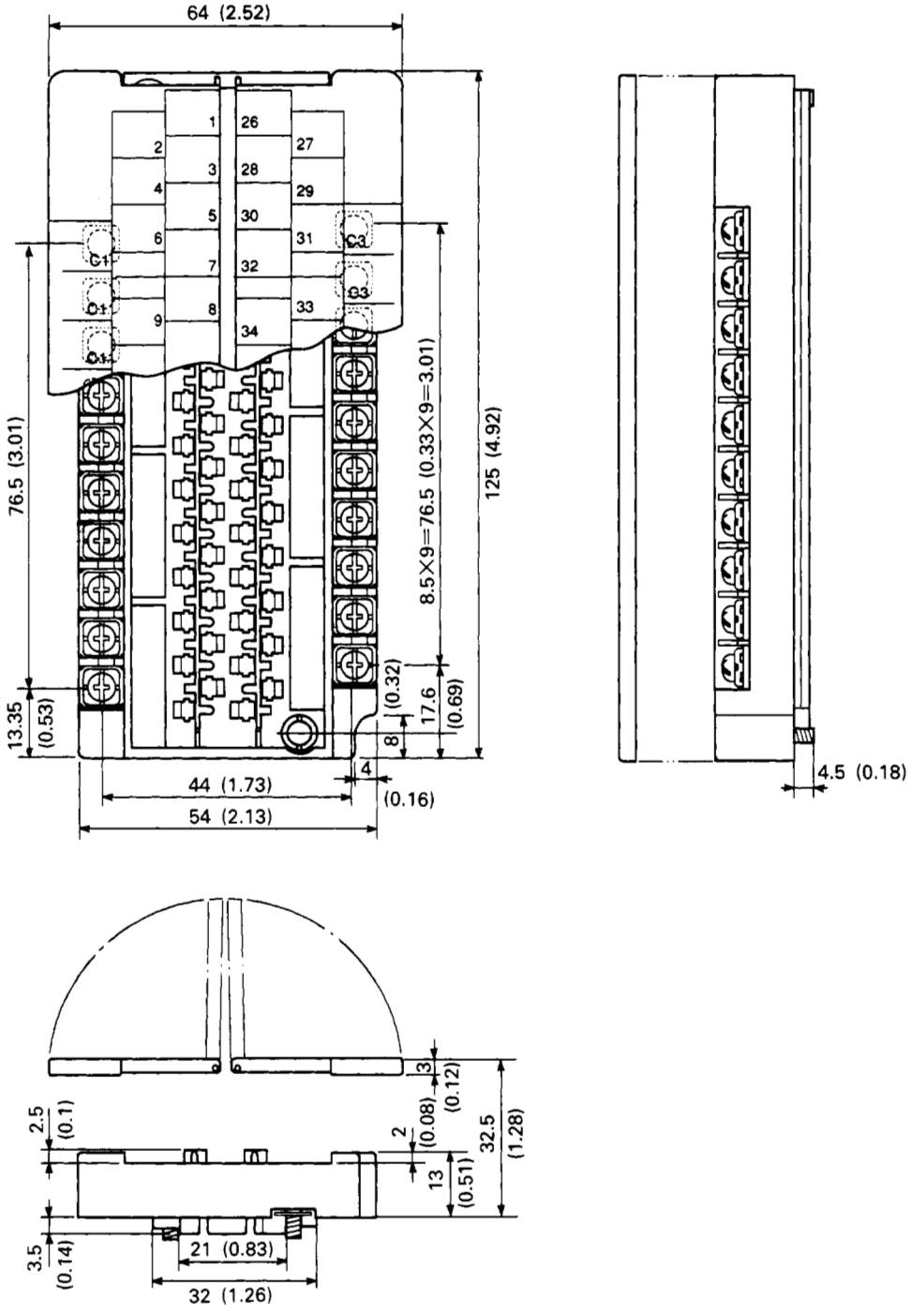

Unit : mm (inch)

(5) External dimensions of the AJ35TB1-16□ series.

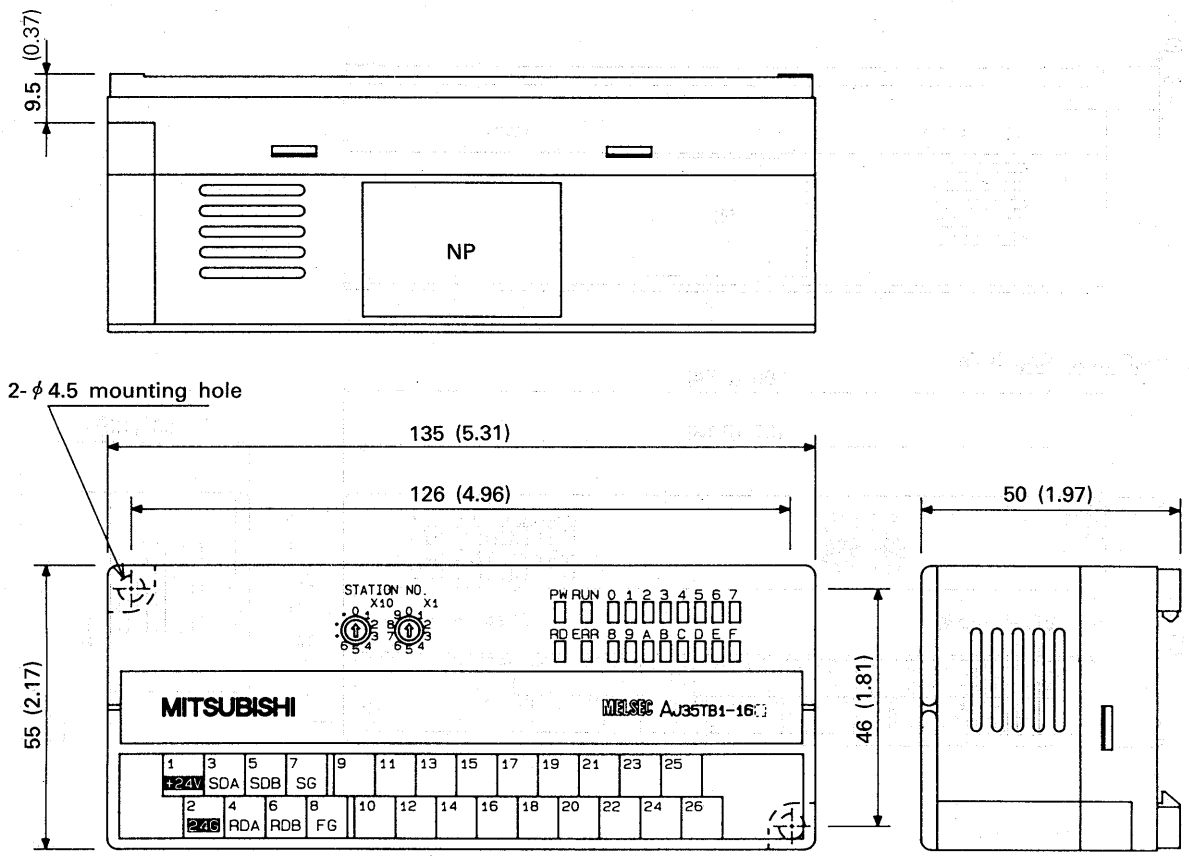

Unit: mm (inch)

(6) External dimensions of the AJ35B2-16□ series.

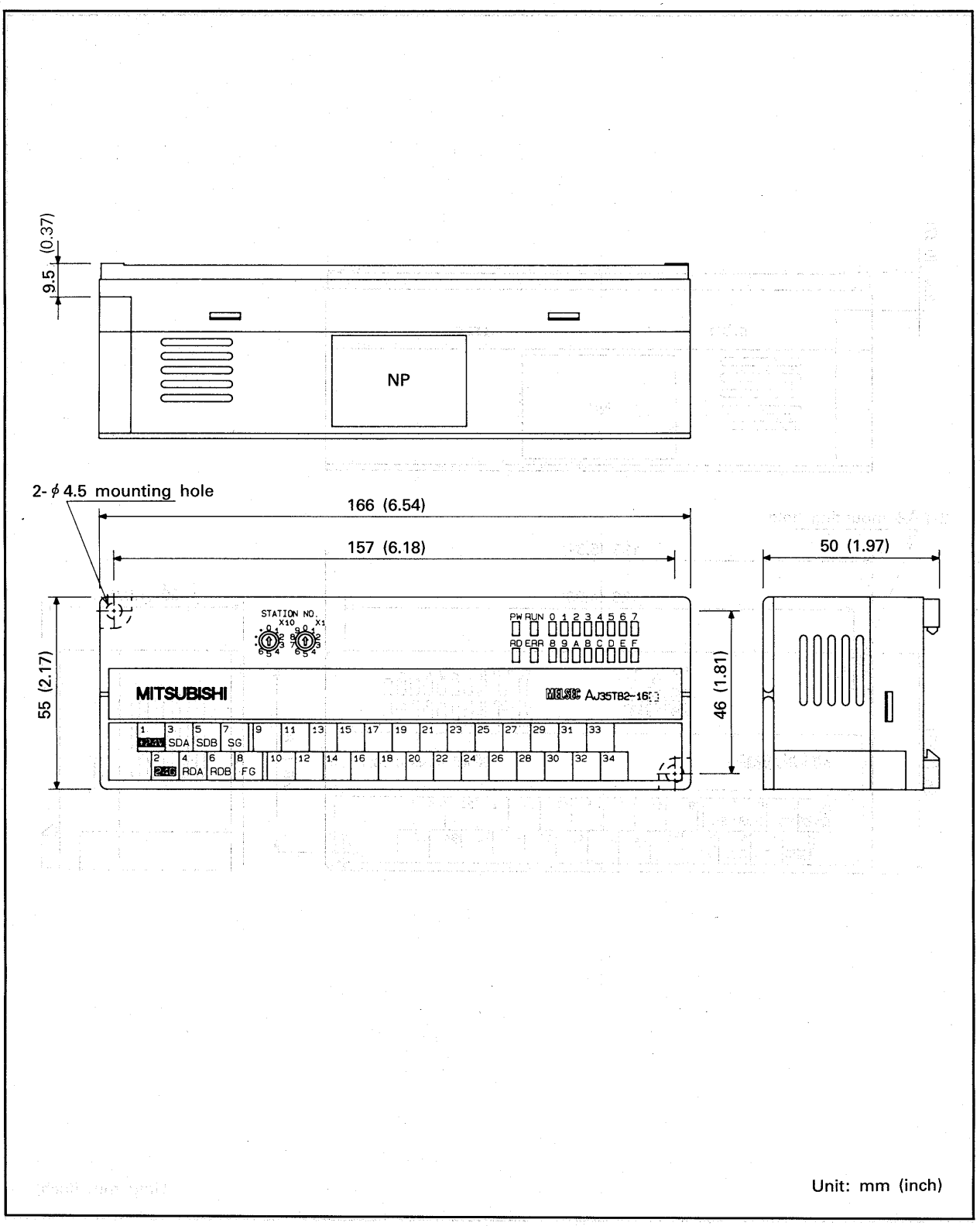

(7) External dimensions of the AJ35TC1-32□ series.

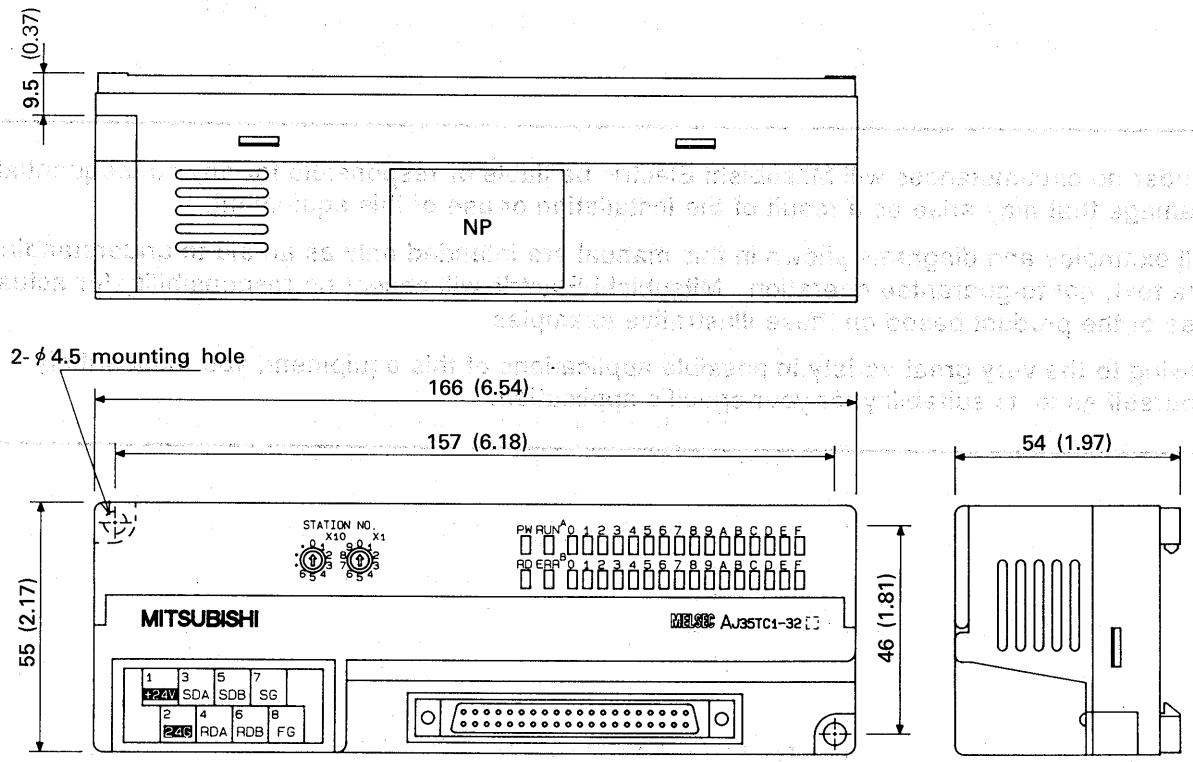

Unit: mm (inch)

IMPORTANT

(1) Design the configuration of a system to provide an external protective or safety inter locking circuit for the PCs.

(2) The components on the printed circuit boards will be damaged by static electricity, so avoid handling them directly. If it is necessary to handle them take the following precautions.

(a) Ground human body and work bench.

(b) Do not touch the conductive areas of the printed circuit board and its electrical parts with and non-grounded tools etc.

Under no circumstances will Mitsubishi Electric be liable or responsible for any consequential damage that may arise as a result of the installation or use of this equipment.

All examples and diagrams shown in this manual are intended only as an aid to understanding the text, not to guarantee operation. Mitsubishi Electric will accept no responsibility for actual use of the product based on these illustrative examples.

Owing to the very great variety in possible applications of this equipment, you must satisfy yourself as to its suitability for your specific application.

MITSUBISHI ELECTRIC CORPORATION

HEAD OFFICE: MITSUBISHI DENKI BLDG MARUNOUCHI TOKYO 100 TELEX: J24532 CABLE MELCO TOKYO
NAGOYA WORKS : 1-14 , YADA-MINAMI 5 , HIGASHI-KU , NAGOYA , JAPAN

When exported from Japan, this manual does not require application to the Ministry of International Trade and Industry for service transaction permission.

IB (NA) 66236-C (9307) MEE Printed in Japan

Specifications subject to change without notice.